LTE OPEN EVB

User Guide

LTE Module Series

Rev. LTE_OPEN_EVB_User_Guide_V1.1

Date: 2018-03-19

Status: Released

www.quectel.com

Our aim is to provide customers with timely and comprehensive service. For any assistance, please contact our company headquarters:

Quectel Wireless Solutions Co., Ltd.
7th Floor, Hongye Building, No.1801 Hongmei Road, Xuhui District, Shanghai 200233, China
Tel: +86 21 5108 6236
Email: info@quectel.com

Or our local office. For more information, please visit:
http://quectel.com/support/sales.htm

For technical support, or to report documentation errors, please visit:
http://quectel.com/support/technical.htm
Or email to: support@quectel.com

GENERAL NOTES

QUECTEL OFFERS THE INFORMATION AS A SERVICE TO ITS CUSTOMERS. THE INFORMATION PROVIDED IS BASED UPON CUSTOMERS' REQUIREMENTS. QUECTEL MAKES EVERY EFFORT TO ENSURE THE QUALITY OF THE INFORMATION IT MAKES AVAILABLE. QUECTEL DOES NOT MAKE ANY WARRANTY AS TO THE INFORMATION CONTAINED HEREIN, AND DOES NOT ACCEPT ANY LIABILITY FOR ANY INJURY, LOSS OR DAMAGE OF ANY KIND INCURRED BY USE OF OR RELIANCE UPON THE INFORMATION. ALL INFORMATION SUPPLIED HEREIN IS SUBJECT TO CHANGE WITHOUT PRIOR NOTICE.

COPYRIGHT

THE INFORMATION CONTAINED HERE IS PROPRIETARY TECHNICAL INFORMATION OF QUECTEL WIRELESS SOLUTIONS CO., LTD. TRANSMITTING, REPRODUCTION, DISSEMINATION AND EDITING OF THIS DOCUMENT AS WELL AS UTILIZATION OF THE CONTENT ARE FORBIDDEN WITHOUT PERMISSION. OFFENDERS WILL BE HELD LIABLE FOR PAYMENT OF DAMAGES. ALL RIGHTS ARE RESERVED IN THE EVENT OF A PATENT GRANT OR REGISTRATION OF A UTILITY MODEL OR DESIGN.

Copyright © Quectel Wireless Solutions Co., Ltd. 2018. All rights reserved.

About the Document

History

Revision	Date	Author	Description
1.0	2017-12-29	Woody WU/ Lorry XU	Initial
1.1	2018-03-19	Eden LIU	Updated the GPIO List for AG35-QuecOpen module (Table 27).

Contents

About the Document **2**
Contents **3**
Table Index **5**
Figure Index **6**

1 Introduction **8**
1.1. Safety Information 8

2 General Overview **10**
2.1. Applicable Modules 10
2.2. Key Features 11
2.3. Interface Overview 13
2.4. Top View of LTE OPEN EVB 16

3 EVB Kit Accessories Assembly **17**
3.1. EVB Kit 17
3.2. EVB Kit Accessories 18

4 Interface Applications **20**
4.1. Power Interfaces (J0301/J0601) 20
4.2. LTE-QuecOpen TE-A Interface 22
4.3. Wi-Fi & Ethernet TE-A Interface 22
4.4. USB Interface (J0601) 25
4.5. Audio Interfaces 26
4.5.1. Digital Audio Codec Board Interface (J0804) 26
4.5.2. Analog Audio Interfaces (J0805/J0801/J0802) 28
4.5.2.1. Loudspeaker Interface (J0805) 28
4.5.2.2. Earphone Interface (J0802) 28
4.5.2.3. Handset Interface (J0801) 30
4.6. U(SIM) Interface (J0901) 31
4.7. SD Card Interfaces & eMMC (J0701/J0702 & U0702) 33
4.8. UART Interfaces (J0501/J0502/J0503) 38
4.9. SPI Flash (U0601) 42
4.10. EEPROM (U0903) 43
4.11. Switches and Buttons 44
4.12. Status Indicators 45
4.13. GPIO Interfaces 46
4.14. Test Points 50

5 Operation Procedures Illustration **56**
5.1. Power on Modules 56
5.1.1. Power on LTE-QuecOpen Modules 56
5.1.2. Power on Wi-Fi Modules 56
5.2. Communication Via USB or UART Interface 57

5.2.1. Communication via USB Interface 57
5.2.2. Communication via UART Interface 58
5.3. Firmware Upgrade 59
5.4. Reset Modules 59
5.5. Power off Modules 60
5.5.1. Power off LTE-QuecOpen modules 60
5.5.2. Power off Wi-Fi modules 60

6 Appendix A References 61

Table Index

TABLE 1: KEY FEATURES OF LTE OPEN EVB....11
TABLE 2: INTERFACES OF LTE OPEN EVB 13
TABLE 3: ACCESSORIES LIST 18
TABLE 4: S0201 FUNCTION.... 24
TABLE 5: S1001 FUNCTION.... 24
TABLE 6: WI-FI & ETHERNET FUNCTION GPIO CONFIGURATION 25
TABLE 7: CODEC FUNCTION GPIO CONFIGURATION.... 27
TABLE 8: PIN DEFINITION OF J0802 29
TABLE 9: PIN DEFINITION OF J0801 31
TABLE 10: PIN DEFINITION OF J0901 32
TABLE 11: (U)SIM HOT-PLUG GPIO CONFIGURATION.... 33
TABLE 12: PIN DEFINITION OF J0701 35
TABLE 13: PIN DEFINITION OF J0702 36
TABLE 14: S0701 FUNCTION 36
TABLE 15: SD CARD FUNCTION GPIO CONFIGURATION 37
TABLE 16: EMMC FUNCTION GPIO CONFIGURATION.... 38
TABLE 17: PIN DEFINITION OF J0501 39
TABLE 18: PIN DEFINITION OF J0502 40
TABLE 19: PIN DEFINITION OF J0503 40
TABLE 20: COM (MAIN) & COM (UART1) FUNCTION GPIO CONFIGURATION.... 41
TABLE 21: SPI FLASH FUNCTION GPIO CONFIGURATION 43
TABLE 22: EEPROM FUNCTION GPIO CONFIGURATION 44
TABLE 23: DESCRIPTION OF SWITCHES AND BUTTONS 45
TABLE 24: DESCRIPTION OF STATUS INDICATION LEDS 46
TABLE 25: PIN DEFINITION OF J0202 46
TABLE 26: PIN DEFINITION OF J0201 47
TABLE 27: GPIO LIST FOR AG35-QUECOPEN MODULE.... 48
TABLE 28: PIN DEFINITION OF TEST POINTS 51
TABLE 29: INDICATION OF D0312 57
TABLE 30: RELATED DOCUMENTS.... 61
TABLE 31: TERMS AND ABBREVIATIONS.... 61

Figure Index

FIGURE 1: LTE OPEN EVB INTERFACE OVERVIEW 13
FIGURE 2: LTE OPEN EVB TOP VIEW 16
FIGURE 3: LTE OPEN EVB KIT 17
FIGURE 4: EVB KIT ACCESSORIES 18
FIGURE 5: POWER SUPPLY SCHEMATIC FOR LTE OPEN EVB 21
FIGURE 6: POWER INTERFACES 21
FIGURE 7: POWER PLUG DESIGN 21
FIGURE 8: CONNECTION BETWEEN LTE-QUECOPEN TE-A AND EVB 22
FIGURE 9: SIMPLIFIED FC20-TE-A/AF20-TE-A INTERFACE SCHEMATIC 23
FIGURE 10: SIMPLIFIED SDC1 INTERFACE SCHEMATIC 23
FIGURE 11: CONNECTION BETWEEN FC20-TE-A AND EVB 24
FIGURE 12: WI-FI & ETHERNET FUNCTION GPIO CONFIGURATION 25
FIGURE 13: REFERENCE DESIGN FOR CONNECTION BETWEEN CODEC BOARD AND EVB 26
FIGURE 14: CONNECTION BETWEEN CODEC BOARD AND EVB 27
FIGURE 15: CODEC FUNCTION GPIO CONFIGURATION 27
FIGURE 16: REFERENCE CIRCUIT DESIGN FOR LOUDSPEAKER INTERFACE J0805 28
FIGURE 17: REFERENCE CIRCUIT DESIGN FOR EARPHONE INTERFACE J0802 28
FIGURE 18: PIN ASSIGNMENT OF J0802 29
FIGURE 19: SKETCH OF AUDIO PLUG 30
FIGURE 20: REFERENCE CIRCUIT DESIGN FOR HANDSET INTERFACE J0801 30
FIGURE 21: PIN ASSIGNMENT OF J0801 31
FIGURE 22: SIMPLIFIED INTERFACE SCHEMATIC FOR U(SIM) CARD CONNECTOR J0901 32
FIGURE 23: PIN ASSIGNMENT OF J0901 32
FIGURE 24: (U)SIM HOT-PLUG GPIO CONFIGURATION 33
FIGURE 25: SIMPLIFIED INTERFACE SCHEMATIC FOR SD CARD INTERFACE J0701, J0702 34
FIGURE 26: PIN ASSIGNMENT OF J0701 34
FIGURE 27: PIN ASSIGNMENT OF J0702 34
FIGURE 28: EMMC DEVICE 35
FIGURE 29: SD CARD FUNCTION GPIO CONFIGURATION 37
FIGURE 30: EMMC FUNCTION GPIO CONFIGURATION 37
FIGURE 31: UART BLOCK DIAGRAM 38
FIGURE 32: PIN ASSIGNMENT OF J0501 39
FIGURE 33: PIN ASSIGNMENT OF J0502 39
FIGURE 34: PIN ASSIGNMENT OF J0503 40
FIGURE 35: COM (MAIN) & COM (UART1) FUNCTION GPIO CONFIGURATION 41
FIGURE 36: SPI FLASH DEVICE 42
FIGURE 37: SPI FLASH FUNCTION GPIO CONFIGURATION 42
FIGURE 38: EEPROM DEVICE 43
FIGURE 39: EEPROM FUNCTION GPIO CONFIGURATION 43
FIGURE 40: S0201/S0701/S1001 SWITCH 44
FIGURE 41: S0301/S0401 SWITCH AND S0403/S0402 BUTTON 44

FIGURE 42: STATUS INDICATION LEDS 45
FIGURE 43: GPIO JUMPERS J0201 AND J0202 46
FIGURE 44: TEST POINT J1004/J1005/J1006 50
FIGURE 45: TEST POINT J1003/J0505/J1007/J10204/J0203 51
FIGURE 46: USB PORTS 57
FIGURE 47: COM PORT SETTING FIELD ON QCOM (USB AT PORT CONNECTION) 58
FIGURE 48: USB SERIAL PORT 58
FIGURE 49: COM PORT SETTING FIELD ON QCOM (USB SERIAL PORT CONNECTION) 58
FIGURE 50: QFLASH CONFIGURATIONS FOR FIRMWARE UPGRADE 59

1 Introduction

This document describes how to use the evaluation board (LTE OPEN EVB) of Quectel LTE-QuecOpen and Wi-Fi modules. It is an assistant tool for engineers to develop and test Quectel LTE-QuecOpen and Wi-Fi modules.

1.1. Safety Information

The following safety precautions must be observed during all phases of the operation, such as usage, service or repair of any cellular terminal or mobile incorporating Quectel LTE-QuecOpen and Wi-Fi modules. Manufacturers of the cellular terminal should send the following safety information to users and operating personnel, and incorporate these guidelines into all manuals supplied with the product. If not so, Quectel assumes no liability for customers' failure to comply with these precautions.

	Full attention must be given to driving at all times in order to reduce the risk of an accident. Using a mobile while driving (even with a handsfree kit) causes distraction and can lead to an accident. You must comply with laws and regulations restricting the use of wireless devices while driving.
	Switch off the cellular terminal or mobile before boarding an aircraft. Make sure it is switched off. The operation of wireless appliances in an aircraft is forbidden, so as to prevent interference with communication systems. Consult the airline staff about the use of wireless devices on boarding the aircraft, if your device offers an Airplane Mode which must be enabled prior to boarding an aircraft.
	Switch off your wireless device when in hospitals, clinics or other health care facilities. These requests are designed to prevent possible interference with sensitive medical equipment.
	Cellular terminals or mobiles operating over radio frequency signal and cellular network cannot be guaranteed to connect in all conditions, for example no mobile fee or with an invalid (U)SIM card. While you are in this condition and need emergent help, please remember using emergency call. In order to make or receive a call, the cellular terminal or mobile must be switched on and in a service area with adequate cellular signal strength.

	Your cellular terminal or mobile contains a transmitter and receiver. When it is ON, it receives and transmits radio frequency energy. RF interference can occur if it is used close to TV set, radio, computer or other electric equipment.
	In locations with potentially explosive atmospheres, obey all posted signs to turn off wireless devices such as your phone or other cellular terminals. Areas with potentially explosive atmospheres include fuelling areas, below decks on boats, fuel or chemical transfer or storage facilities, areas where the air contains chemicals or particles such as grain, dust or metal powders, etc.

2 General Overview

The LTE OPEN EVB is designed for developers to develop applications based on Quectel LTE-QuecOpen modules.

2.1. Applicable Modules

The EVB can test basic functionalities of the following modules:

LTE-QuecOpen modules:
- EC2x-QuecOpen [1)]
- BG96-QuecOpen
- AG35-QuecOpen

Wi-Fi modules:
- FC20 series [2)]
- AF20 [3)]

NOTES

1. [1)] EC2x-QuecOpen refers to EC21/EC25/EC20 R2.0/EC20 R2.1-QuecOpen modules.
2. [2)] FC20 series contains FC20 and FC20-N, and it is used in combination with Quectel EC2x-QuecOpen modules. Hereinafter, it is called FC20 collectively.
3. [3)] AF20 is used in combination with Quectel AG35-QuecOpen module.

2.2. Key Features

The following table describes the detailed features of LTE OPEN EVB.

Table 1: Key Features of LTE OPEN EVB

Features	Implementation
Power Supply	DC power supply (J0301 or J0601): 4.5V~5.5V, typically 5.0V VBAT (T0104)[1)]: 3.8V
LTE TE-A Interface	Support Quectel LTE-QuecOpen modules: EC2x/BG96/AG35-QuecOpen
Wi-Fi & Ethernet TE-A Interface	Support Quectel Wi-Fi modules: FC20/AF20
eMMC Device	Manufacturer: MICRON Part number: MTFC4GACAJCN-4M IT
SD Card Interface	Support standard SD card and TF card
SPI Flash Device	Manufacturer: GIGADEVICE Part number: GD25LQ64CWIGR
EEPROM Device	Manufacturer: ATMEL Part number: AT24CS64-SSHM-T
U(SIM) Interface	Support U(SIM) card insertion detection Support U(SIM) card: 3.0V and 1.8V
Audio Interfaces	● One digital audio codec board interface Support Realteck ALC5616 and TI Codec TLV320AIC3104 ● Three analog interfaces used for loudspeaker, earphone and handset
UART Interfaces	Three UART interfaces: ● COM (MAIN): Serial interface for data communication Maximum baud rate supported: 1Mbps [2)] ● COM (DEBUG): Serial interface for debugging purpose Maximum baud rate supported: 1Mbps [2)] ● COM (UART1): Serial interface for data communication Maximum baud rate supported: 1Mbps [2)]
USB Interface	Micro-B interface
Signal Indicators	4 LEDs are available for signal indication 4 LEDs are available for GPIO testing

Switches and Buttons	**Five Switches:** ● Power Switch (S0301) for VBAT ON/OFF control ● SDC1 function switch (S0201) for switching between GPIO and Wi-Fi function. ● SDC2 function switch (S0701) for switching between SD and eMMC functions. ● PCM function switch (S1001) for switching between BT and codec functions. ● Switch S0401 reserved for internal testing. **Two Buttons:** ● PWRKEY (S0403) for turning on/off LTE-QuecOpen modules ● RESET (S0402) for resetting LTE-QuecOpen modules
Physical Characteristics	Size: 200.0mm × 145.0mm × 1.6mm

NOTES

1. [1)] VBAT (T0104) is a test point on LTE OPEN EVB, and is used to test the current of the modules. If it is used to supply power for the modules, then R0106 should be disconnected.
2. [2)] The maximum baud rate is limited to the RS232 level shifter chip on the EVB. For the maximum baud rates supported by the modules, please refer to their respective hardware designs.

2.3. Interface Overview

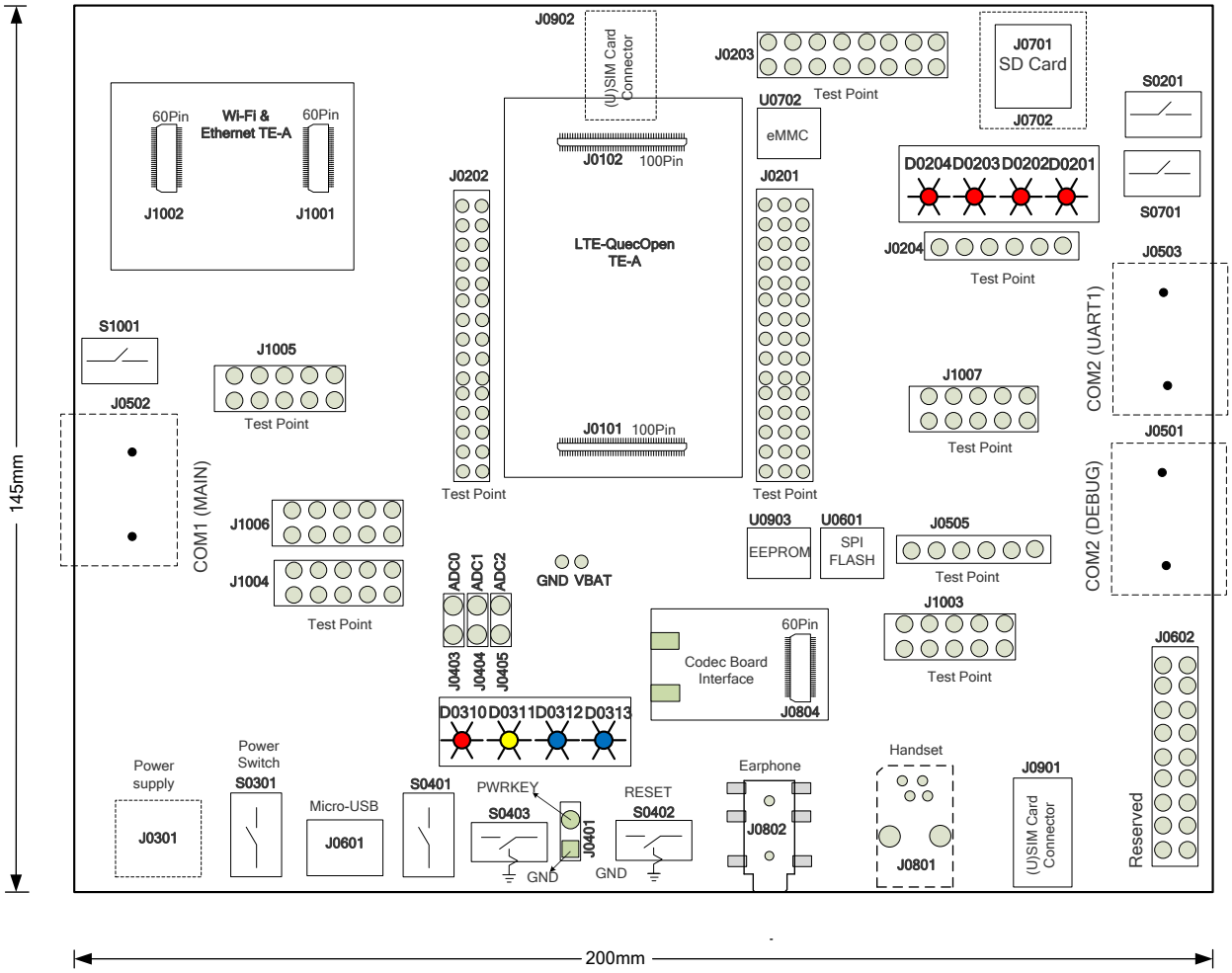

Figure 1: LTE OPEN EVB Interface Overview

Table 2: Interfaces of LTE OPEN EVB

Interface	Reference No.	Description
Power Interfaces [1)]	J0301 (bottom side)	● The power jack on the EVB ● Typical supply voltage: +5V
	J0601	● Micro-B USB power supply ● Typical supply voltage: +5V
	VBAT, GND	● Test points on the EVB to test the current of LTE-QuecOpen modules ● Typical supply voltage: +3.8V ● If VBAT is used to supply power for LTE-QuecOpen

		modules, then R0106 must be disconnected
Micro-B USB Interface	J0601	USB device interface
Power Switch	S0301	VBAT ON/OFF control
PWRKEY	S0403	Power key (push button), used to turn on/off LTE-QuecOpen modules
	J0401	Jumper wire used to connect PWRKEY to GND
RESET	S0402	Reset button (push button), used to reset LTE-QuecOpen modules
SDC1 Function Switch	S0201	● Switched to left: connect the GPIO interface of J0203 to the module's SDC1 interface, for testing customers' own modules ● Switched to right: connect SDIO interface of FC20 and AF20 modules to SDC1 interface of LTE-QuecOpen modules
SDC2 Function Switch	S0701	● Switched to left: connect SD card interface of EVB to SDC2 interface of LTE-QuecOpen modules ● Switched to right: connect eMMC to SDC2 interface of LTE-QuecOpen modules
PCM Function Switch	S1001	● Switched to left: connect BT interface (PCM) of AF20 to the PCM interface of AG35 module ● Switched to right: connect the codec board interface (J0804) on EVB to the PCM interface of LTE-QuecOpen modules
Switch	S0401	Reserved for internal testing. Switch it to down by default.
Audio Interfaces	J0804	Codec board interface
	J0805	● Used for loudspeaker ● Used to test the analog audio function of LTE-QuecOpen modules
	J0802	● Used for earphone ● Used to test the analog audio function of LTE-QuecOpen modules
	J0801 (bottom side)	● Used for handset ● Used to test the analog audio function of LTE-QuecOpen modules
U(SIM) Interfaces	J0901	U(SIM) card connector 1
	J0902	U(SIM) card connector 2 (Reserved)

UART Interfaces	J0501 (bottom side)	Debug UART port
	J0502 (bottom side)	Main UART port
	J0503 (bottom side)	UART1 port
Status Indicators	D0310, D0311, D0312, D0313, D0201, D0202, D0203, D0204,	● D0310: VBAT ON/OFF indicator ● D0311: power ON/OFF status indicator for LTE-QuecOpen modules ● D0312: network status indicator for LTE-QuecOpen modules ● D0313: power saving mode status indicator for BG96-QuecOpen module ● D0201~D0204: used for GPIO testing, and a high level will light up the LEDs
TE-A Interfaces	J0101, J0102	Connectors for LTE-QuecOpen TE-A
	J0804	Connector for codec board interface
	J1001, J1002	Connectors for of Wi-Fi & Ethernet TE-A
ADC Interfaces	J0403, J0404, J0405	● Insert the jumper cap: connect the analog signals on EVB to the module's ADC interface ● Pull out the jumper cap: external analog signals can be connected to the connectors' upper pins
GPIO Interfaces	J0201, J0202	The GPIO pins can be short-circuited to other functional pins via the jumper caps.
Test Points	J0203, J0204, J0505, J1003, J1004, J1005, J1006, J1007	Test pins

NOTE

[1)] The power supply interfaces are designed for LTE-QuecOpen modules. For details about the power supply for Wi-Fi modules, please refer to ***Chapter 4.1*** and ***Chapter 4.3***.

2.4. Top View of LTE OPEN EVB

The top view of LTE OPEN EVB is shown as following figure.

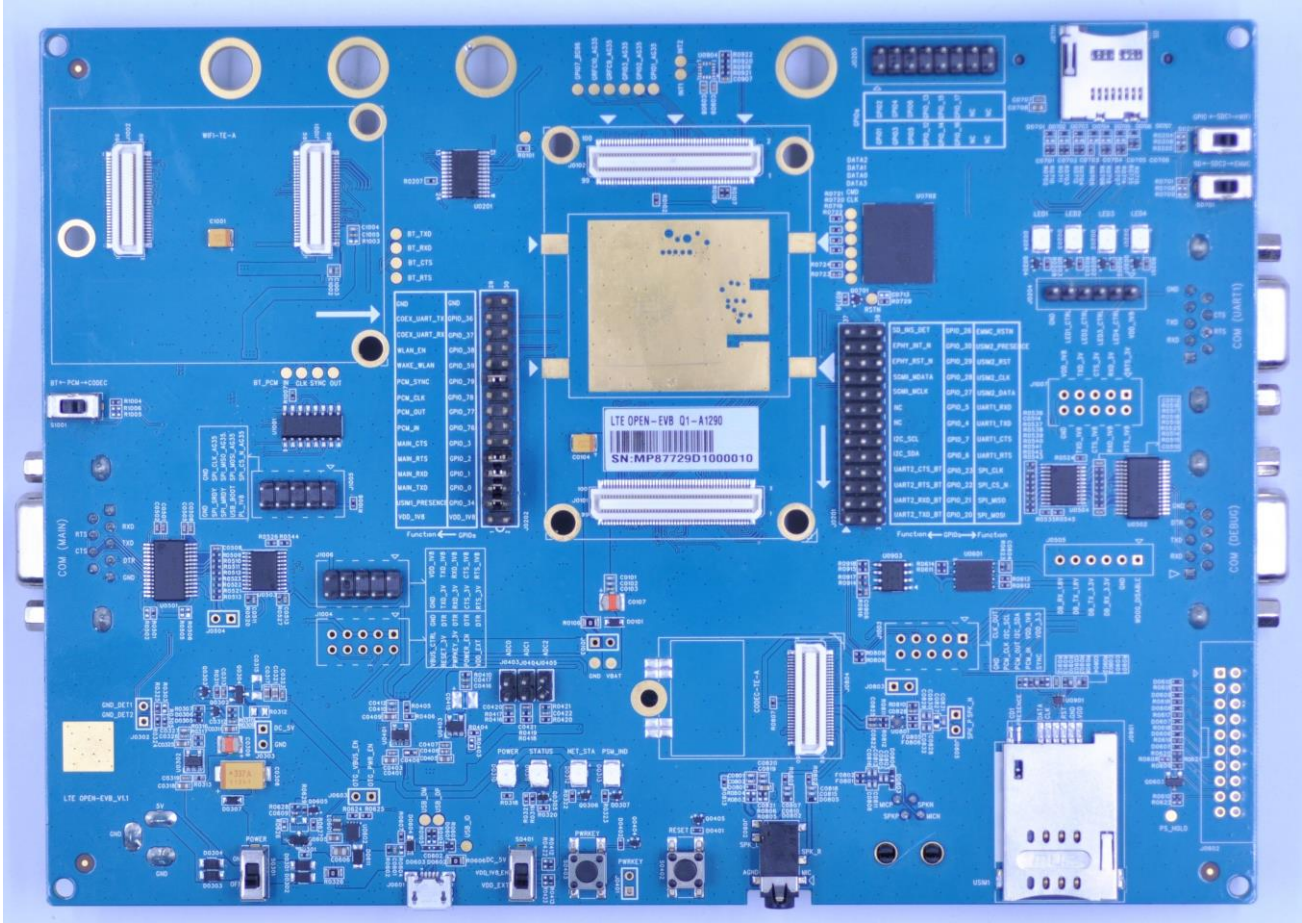

Figure 2: LTE OPEN EVB Top View

3 EVB Kit Accessories Assembly

3.1. EVB Kit

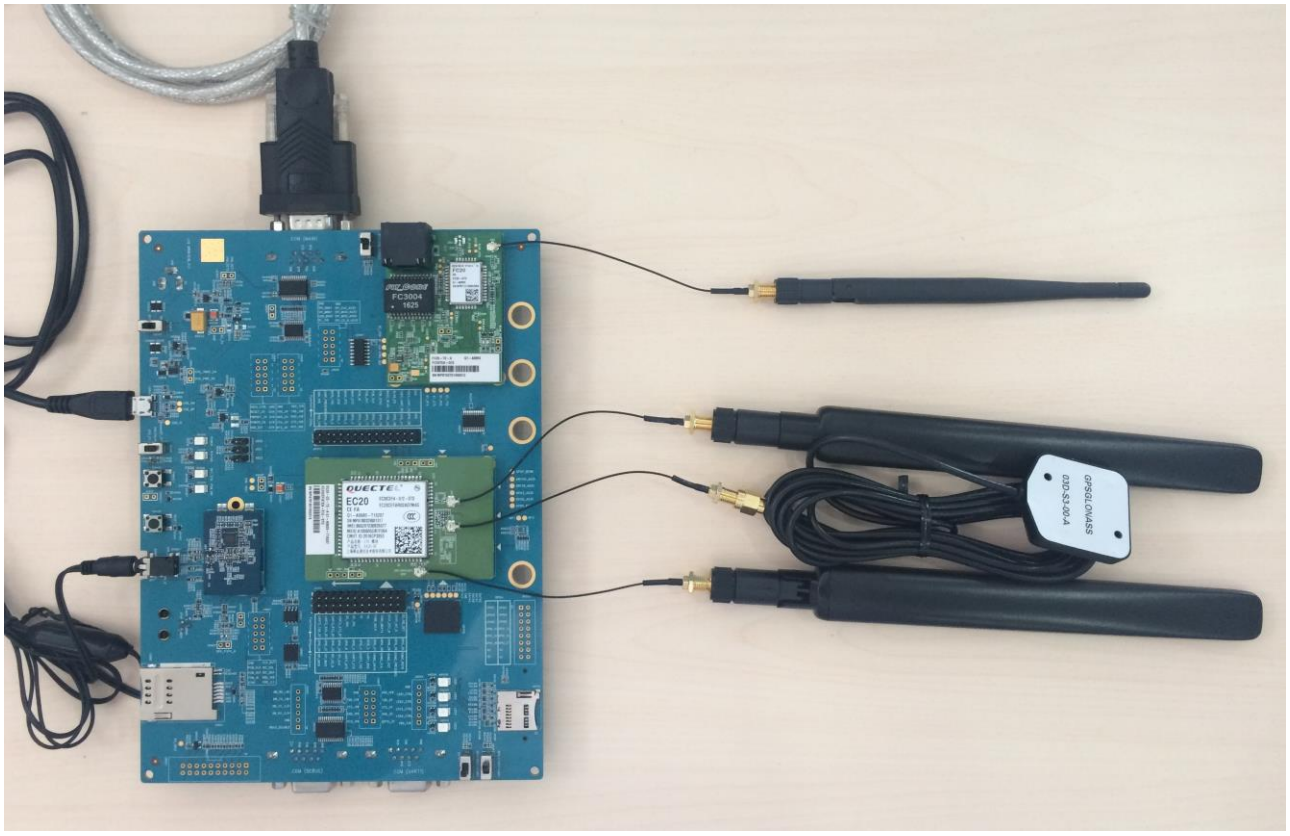

Figure 3: LTE OPEN EVB Kit

3.2. EVB Kit Accessories

All accessories of LTE OPEN EVB kit are listed as below.

Figure 4: EVB Kit Accessories

Table 3: Accessories List

Items	Description	Quantity
Cables	USB to RS-232 converter cable	1
	Micro-USB cable	1
	RF cables	4
Antennas	Main antennas	2
	GNSS antenna (passive)	1

	Wi-Fi antenna	1
Audio	Earphone	1
Disks	USB 2.0 to RS-232 driver and USB driver disk	2
Codec Boards	ALC5616 and TLV320AIC3104 codec boards	2
Others	Bolts and coupling nuts for assembling EVB	1
Instruction Sheet	A sheet of paper giving instructions for EVB connection, details of EVB accessories, etc.	1

NOTE

The main antenna can also be used for diversity reception.

4 Interface Applications

This chapter describes the hardware interfaces of LTE OPEN EVB, shown as follows:

- Power interfaces
- LTE-QuecOpen TE-A interface
- Wi-Fi & Ethernet TE-A interface
- Micro-B USB interface
- Audio interfaces
- U(SIM) interfaces
- SD card interfaces & eMMC
- EEPROM
- SPI Flash
- UART interfaces

It also provides information about the buttons, switches, status indicators and test points to help customers use the LTE OPEN EVB.

4.1. Power Interfaces (J0301/J0601)

The LTE OPEN EVB can be powered by an external power adapter through connecting with the power jack (J0301) or Micro-USB receptacle (J0601) on the EVB. The power adapter connects to a step-down converter which can provide the supply voltage (VBAT) required for operating the EVB and the module.

The following two figures show the simplified power supply schematic and the power interfaces of Quectel LTE OPEN EVB.

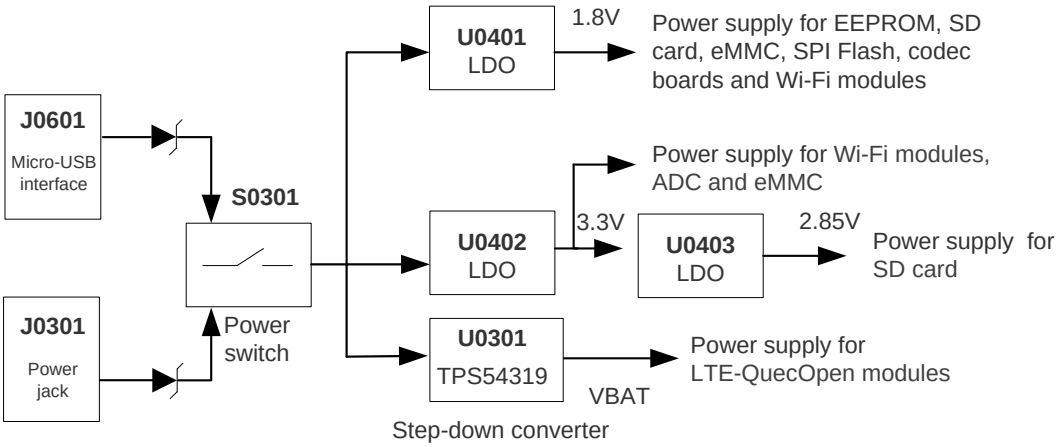

Figure 5: Power Supply Schematic for LTE OPEN EVB

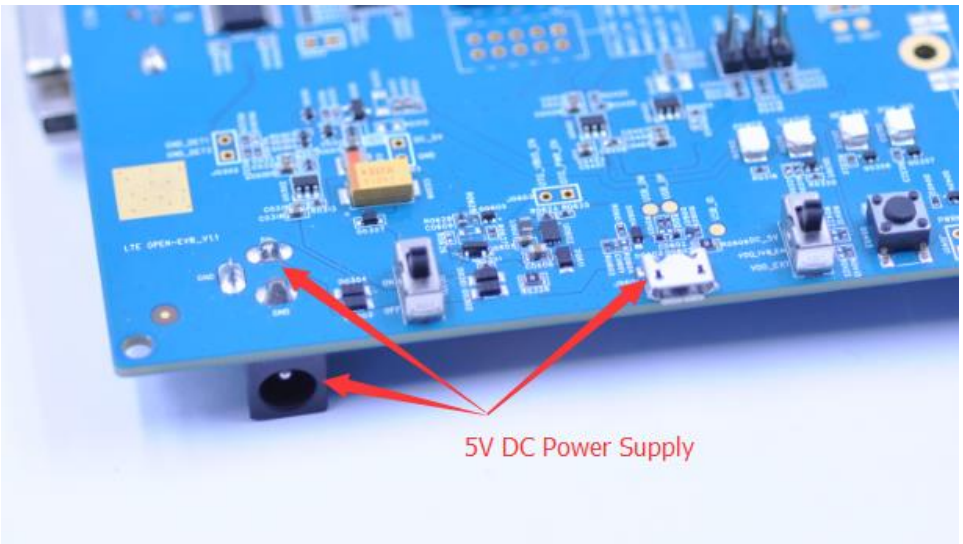

Figure 6: Power Interfaces

Before connecting the power supply, customers have to select a proper DC power adapter to supply power for the LTE OPEN EVB, and the power plug design of the adapter is shown as below.

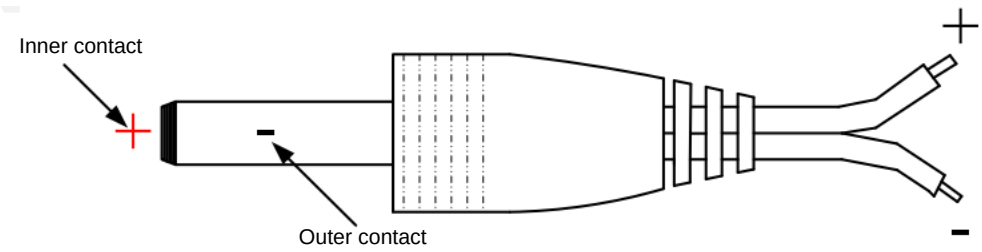

Figure 7: Power Plug Design

4.2. LTE-QuecOpen TE-A Interface

The interface is designed to accommodate the TE-A of LTE-QuecOpen modules. The TE-A is connected to the EVB via BTB connectors J0101 and J0102. The interface allows customers to easily test the functionalities of LTE-QuecOpen modules or to develop applications based on these modules.

The following figure shows the connection between LTE-QuecOpen TE-A and the EVB.

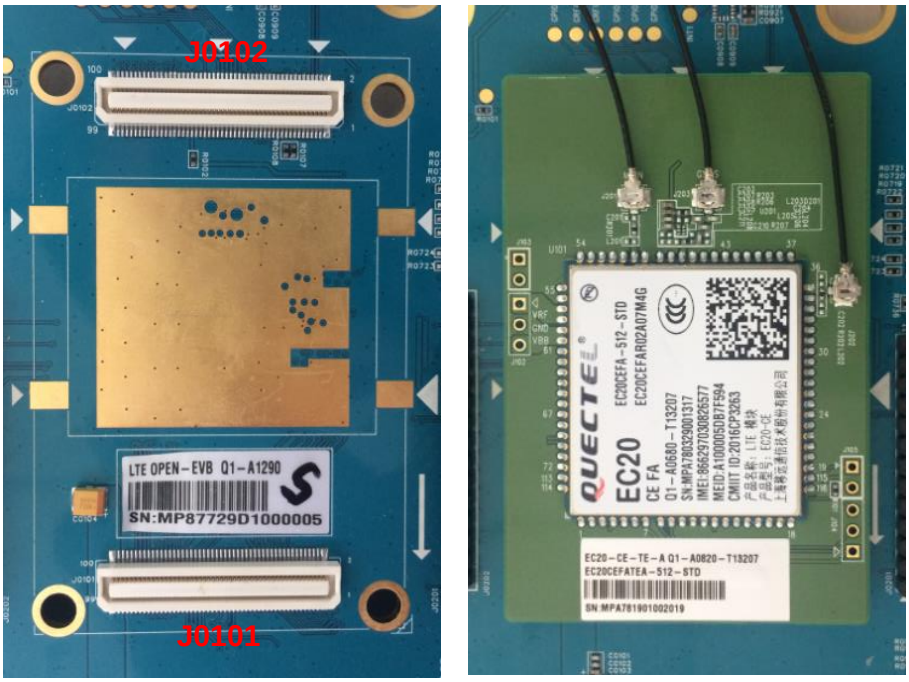

Figure 8: Connection between LTE-QuecOpen TE-A and EVB

4.3. Wi-Fi & Ethernet TE-A Interface

The Wi-Fi & Ethernet TE-A interface is designed to accommodate the TE-A of FC20 and AF20 modules. The TE-A is connected to the EVB via BTB connectors J1001 and J1002. The interface allows customers to easily test the Wi-Fi function of EC2x/AG35 modules or to develop applications with Wi-Fi function.

The following two figures show the connection between FC20-TE-A/AF20-TE-A and the EVB.

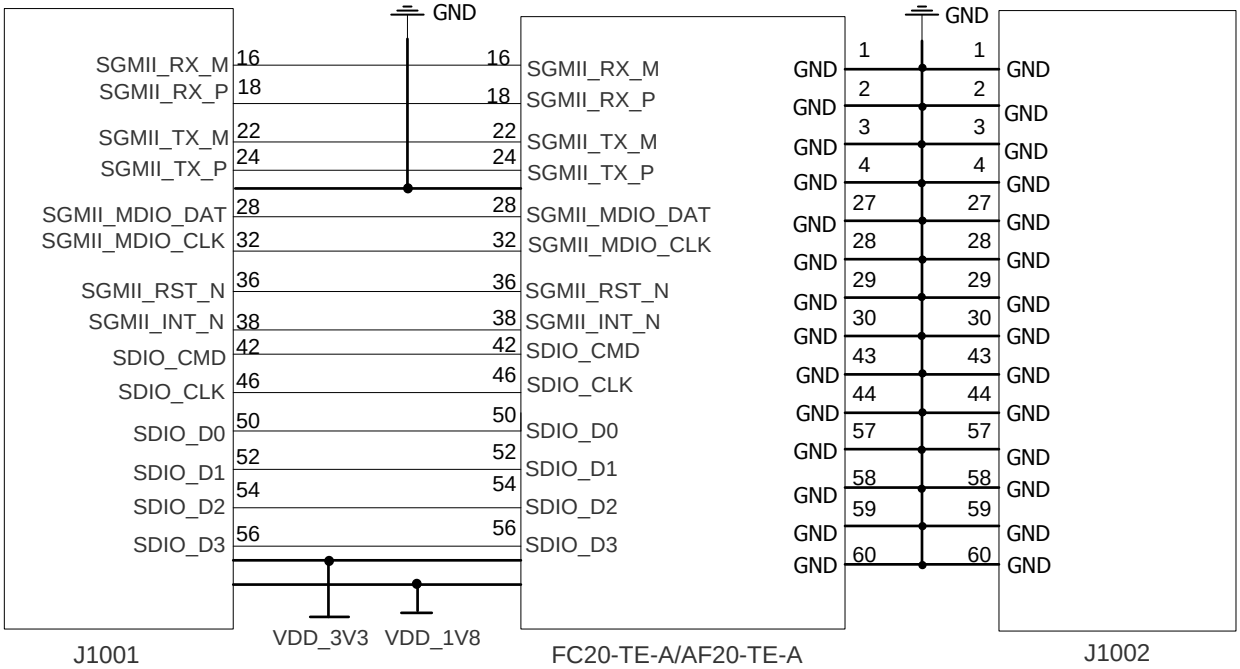

Figure 9: Simplified FC20-TE-A/AF20-TE-A Interface Schematic

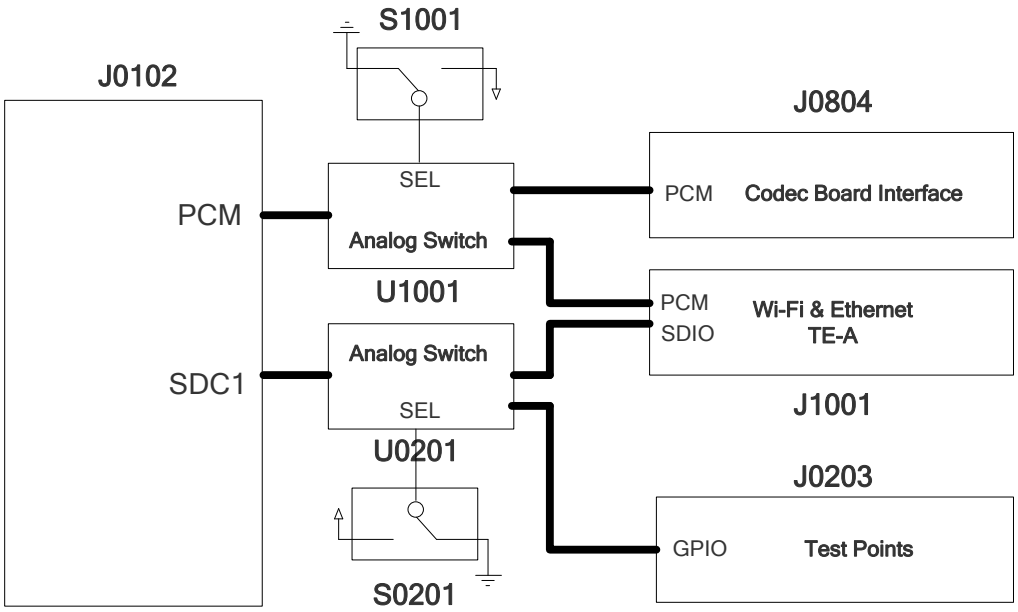

Figure 10: Simplified SDC1 Interface Schematic

Table 4: S0201 Function

Switched Direction	Description
Left	Enable GPIO function
Right	Enable Wi-Fi function

Table 5: S1001 Function

Switched Direction	Description
Left	PCM used for BT
Right	PCM used for codec

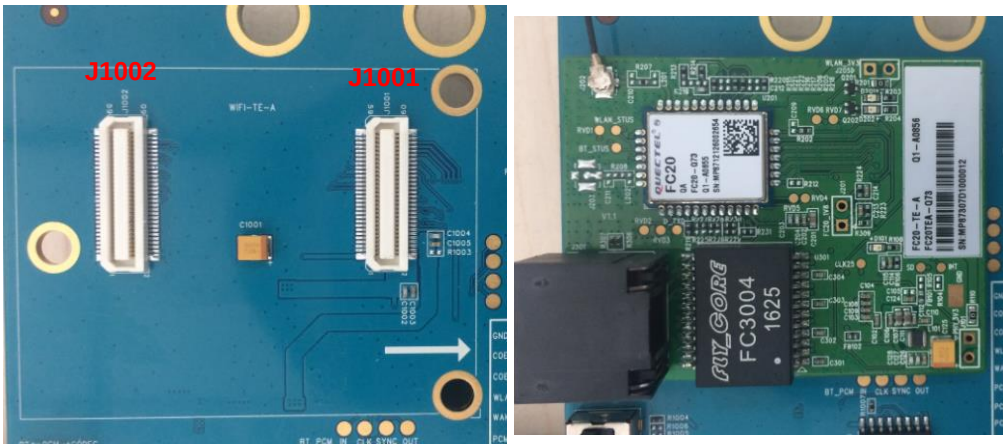

Figure 11: Connection between FC20-TE-A and EVB

If Wi-Fi and Ethernet function is intended to be used, then please switch S0201 to the right and also short the signals illustrated in the figure and table below with the jumper cap.

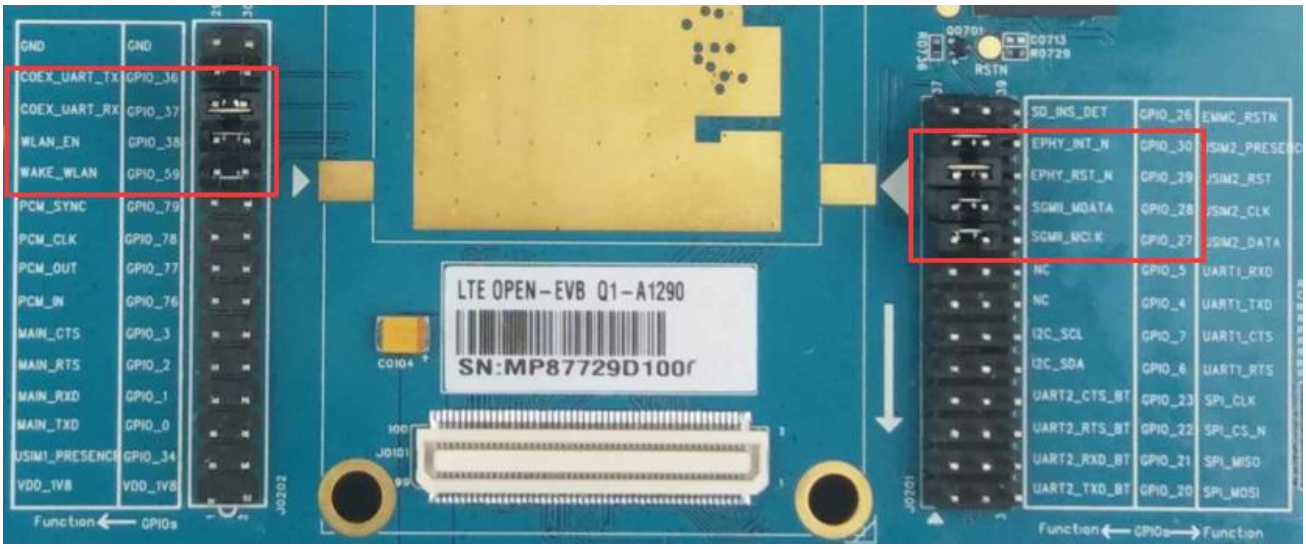

Figure 12: Wi-Fi & Ethernet Function GPIO Configuration

Table 6: Wi-Fi & Ethernet Function GPIO Configuration

Pin No.	Pin Name	Operation	Pin No.	Pin Name
Pin 27 (J0202)	COEX_UART_TX	Shorted to	Pin 28 (J0202)	GPIO_36
Pin 25 (J0202)	COEX_UART_RX	Shorted to	Pin 26 (J0202)	GPIO_37
Pin 23 (J0202)	WLAN_EN	Shorted to	Pin 24 (J0202)	GPIO_38
Pin21 (J0202)	WAKE_WLAN	Shorted to	Pin 22 (J0202)	GPIO_59
Pin 34 (J0201)	EPHY_INT_N	Shorted to	Pin 35 (J0201)	GPIO_30
Pin 31 (J0201)	EPHY_RST_N	Shorted to	Pin 32 (J0201)	GPIO_29
Pin 28 (J0201)	SGMII_MDATA	Shorted to	Pin 29 (J0201)	GPIO_28
Pin 25 (J0201)	SGMII_CLK	Shorted to	Pin 26 (J0201)	GPIO_27

4.4. USB Interface (J0601)

Quectel LTE-QuecOpen modules provide a USB interface which complies with USB 2.0 specifications. USB 2.0 supports high-speed (480Mbps), full-speed (12Mbps) and low-speed (1.5Mbps) modes. The interface is used for AT command communication, data transmission, firmware upgrade and GNSS NEMA output.

LTE OPEN EVB provides a Micro-USB interface J0601 for connection with a host device. The USB data lines USB_DP and USB_DM are connected directly to the LTE-QuecOpen modules. The USB_VBUS line can be used for USB connection detection and EVB power supply.

4.5. Audio Interfaces

LTE OPEN EVB provides one digital audio codec board interface (PCM) J0804 and three analog audio interfaces J0801, J0802 and J0805.

4.5.1. Digital Audio Codec Board Interface (J0804)

LTE OPEN EVB supports two different kinds of external digital audio codecs named ALC5616 and TLV320AIC3104. The codec circuit is assembled on an independent small board which can be interconnected with EVB via the BTB connector J0501.

Customers can select different codecs according to their own application demands, and also can use AT command to switch between codecs. Two examples are provided below. For more details, please refer to ***document [5]***.

- **AT+QDAI=3**: switch codec from TLV320AIC3104 to ALC5616
- **AT+QDAI=5**: switch codec from ALC5616 to TLV320AIC3104

The following figure show a reference design for the connection between digital audio codec boards and the EVB.

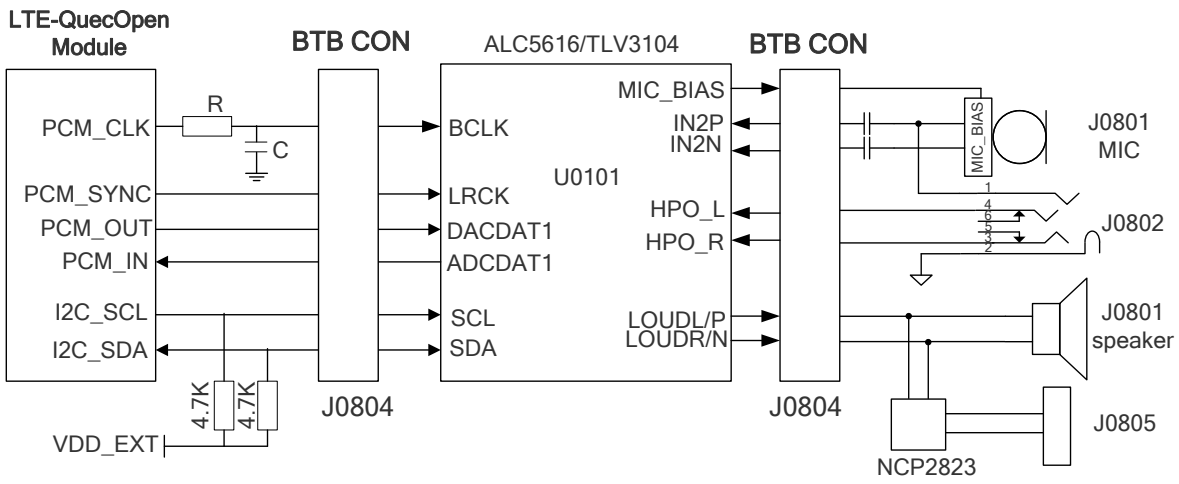

Figure 13: Reference Design for Connection between Codec Board and EVB

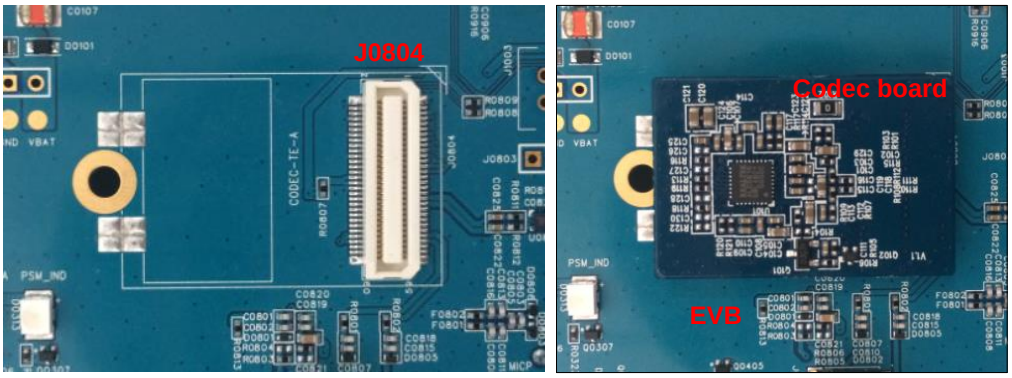

Figure 14: Connection between Codec Board and EVB

If digital audio codec board is intended to be used, then please switch S1001 to the right and short signals illustrated in the figure and table below with the jumper cap.

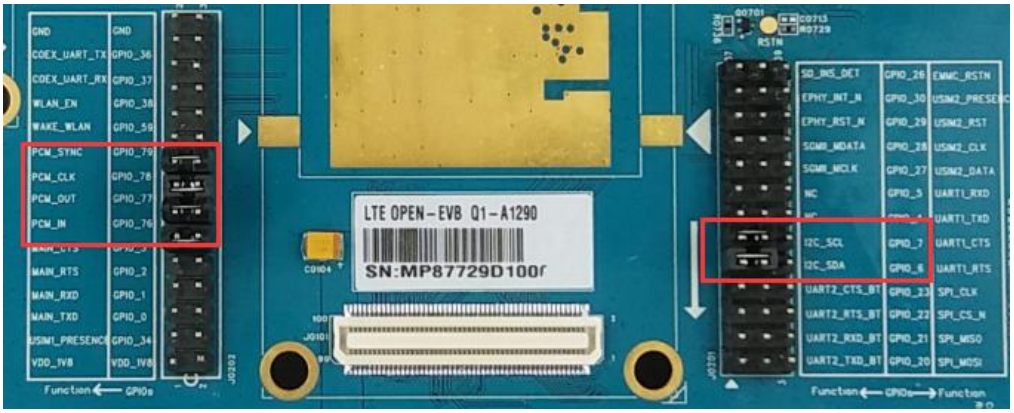

Figure 15: Codec Function GPIO Configuration

Table 7: Codec Function GPIO Configuration

Pin No.	Pin Name	Operation	Pin No.	Pin Name
Pin 19 (J0202)	PCM_SYNC	Shorted to	Pin 20 (J0202)	GPIO_79
Pin 17 (J0202)	PCM_CLK	Shorted to	Pin 18 (J0202)	GPIO_78
Pin 15 (J0202)	PCM_OUT	Shorted to	Pin 16 (J0202)	GPIO_77
Pin 13 (J0202)	PCM_IN	Shorted to	Pin 14 (J0202)	GPIO_76
Pin 14 (J0201)	I2C_SDA	Shorted to	Pin 13 (J0201)	GPIO_6
Pin 17 (J0201)	I2C_SCA	Shorted to	Pin 16 (J0201)	GPIO_7

4.5.2. Analog Audio Interfaces (J0805/J0801/J0802)

4.5.2.1. Loudspeaker Interface (J0805)

Audio interface J0805 is designed for loudspeakers and the following figure shows a reference design of loudspeaker with an external Class-D audio amplifier. If loudspeaker function is intended to be used, please insert the jumper cap on J0803.

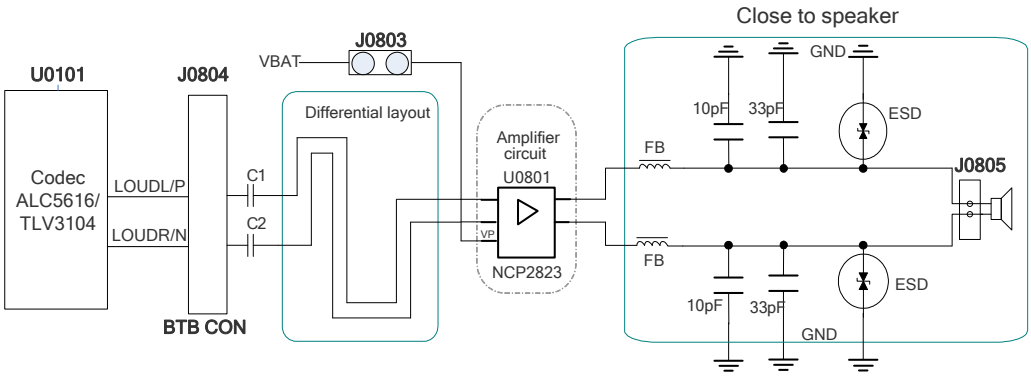

Figure 16: Reference Circuit Design for Loudspeaker Interface J0805

4.5.2.2. Earphone Interface (J0802)

Audio interface J0802 is designed for earphones. A reference circuit design for earphone interface J0802 is shown as following figure.

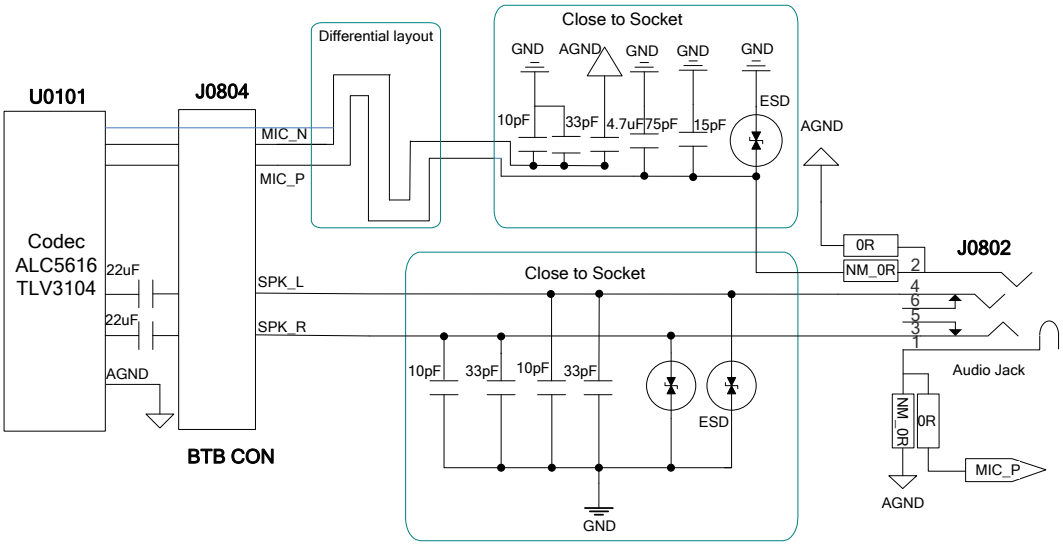

Figure 17: Reference Circuit Design for Earphone Interface J0802

The figure and table below illustrate the pin assignment and pin definition of earphone interface J0802.

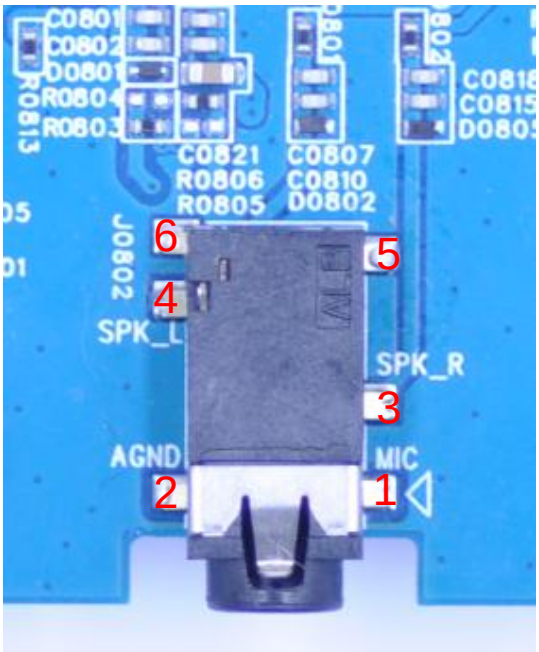

Figure 18: Pin Assignment of J0802

Table 8: Pin Definition of J0802

Pin No.	Pin Name	Description
1	MIC	Microphone input
2	AGND	Dedicated GND for audio
3	SPK_R	Right channel of stereo audio output
4	SPK_L	Left channel of stereo audio output
5, 6	NC	Not connected

The following figure shows the sketch design of audio plug which suits for the audio jack on LTE OPEN EVB.

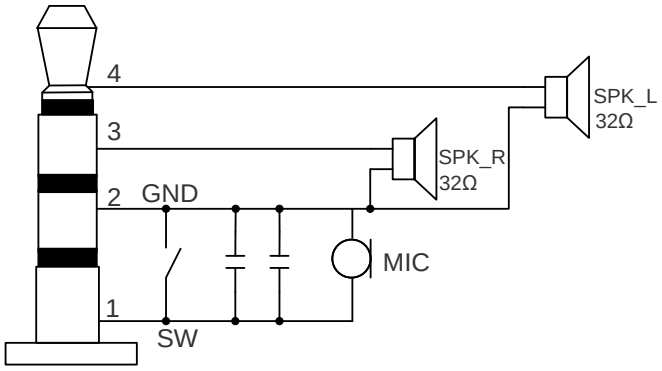

Figure 19: Sketch of Audio Plug

4.5.2.3. Handset Interface (J0801)

Audio interface J0801 is designed for handsets. A reference circuit design for handset interfaces J0801 is shown below.

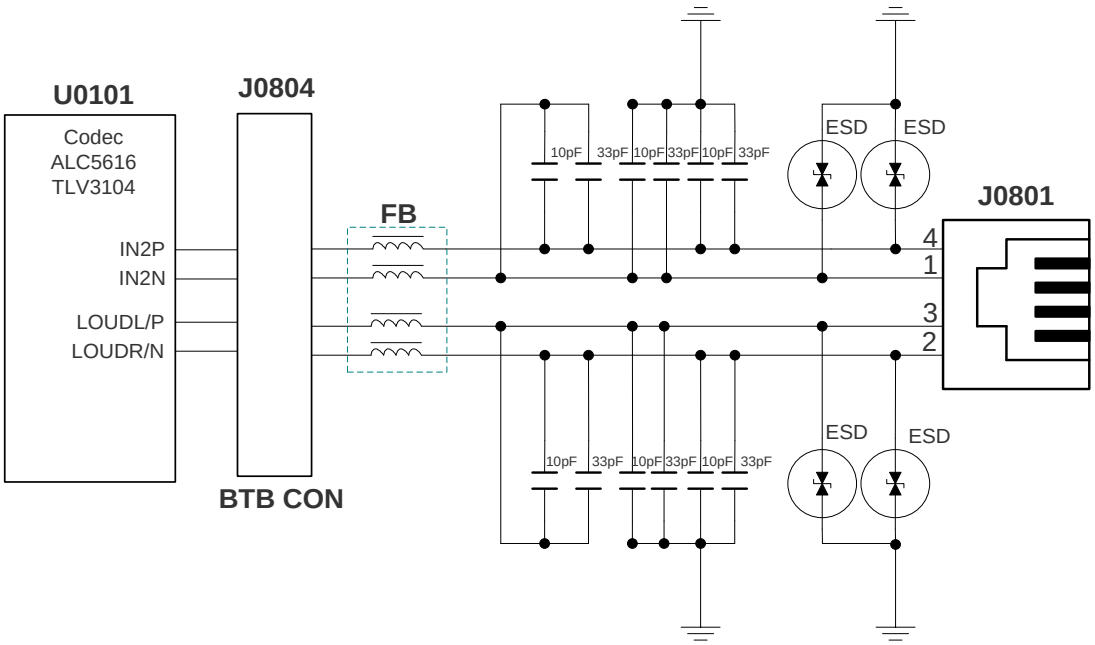

Figure 20: Reference Circuit Design for Handset Interface J0801

The figure and table below illustrate the pin assignment and pin definition of handset interface J0801.

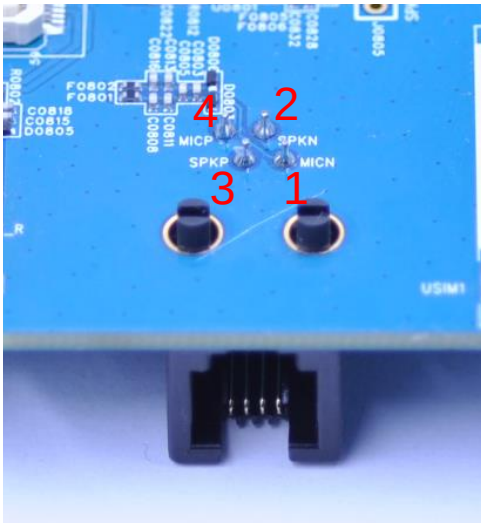

Figure 21: Pin Assignment of J0801

Table 9: Pin Definition of J0801

Pin No.	Pin Name	Function
1	MICN	Negative microphone input
2	SPKN	Negative loudspeaker output
3	SPKP	Positive loudspeaker output
4	MICP	Positive microphone input

4.6. U(SIM) Interface (J0901)

LTE OPEN EVB has two 6-pin push-push type U(SIM) card (3.0V or 1.8V) connectors J0901 and J0902, and J0902 is reserved for future use. The following figure shows the simplified interface schematic for J0901.

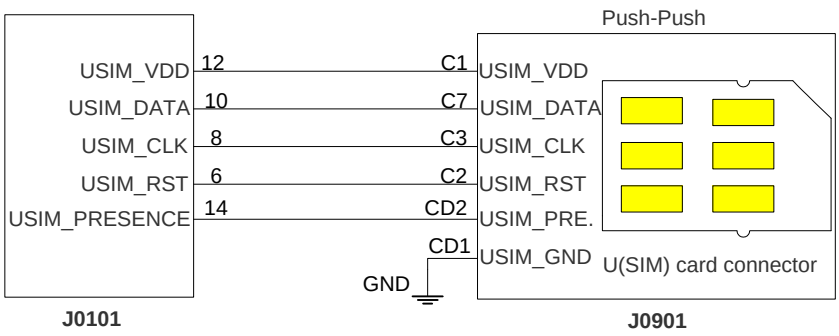

Figure 22: Simplified Interface Schematic for U(SIM) Card Connector J0901

The figure and table below illustrate the pin assignment and pin definition of J0901.

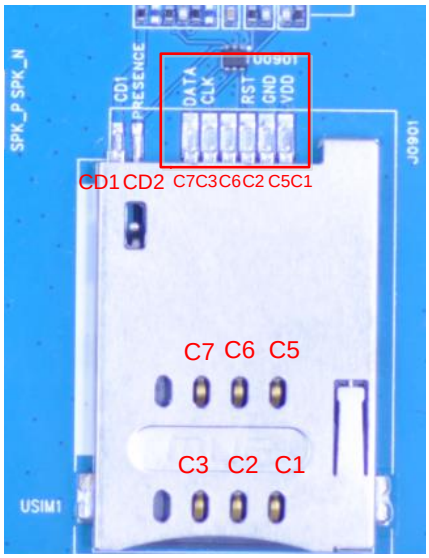

Figure 23: Pin Assignment of J0901

Table 10: Pin Definition of J0901

Pin No.	Signal Name	I/O	Function
C1	USIM_VDD	PO	U(SIM) card power supply, provided by LTE OPEN EVB
C2	USIM_RST	DO	U(SIM) card reset signal
C3	USIM_CLK	DO	U(SIM) card clock signal
C5	GND	/	Ground

C6	VPP	/	Not connected
C7	USIM_DATA	IO	Data line, bidirectional
CD1	GND	/	U(SIM) card insertion detection
CD2	USIM_PRESENCE	DI	U(SIM) card insertion detection. Support low level detection.

If (U)SIM hot-plug function is intended to be used, then please short the signal illustrated in the figure and table below.

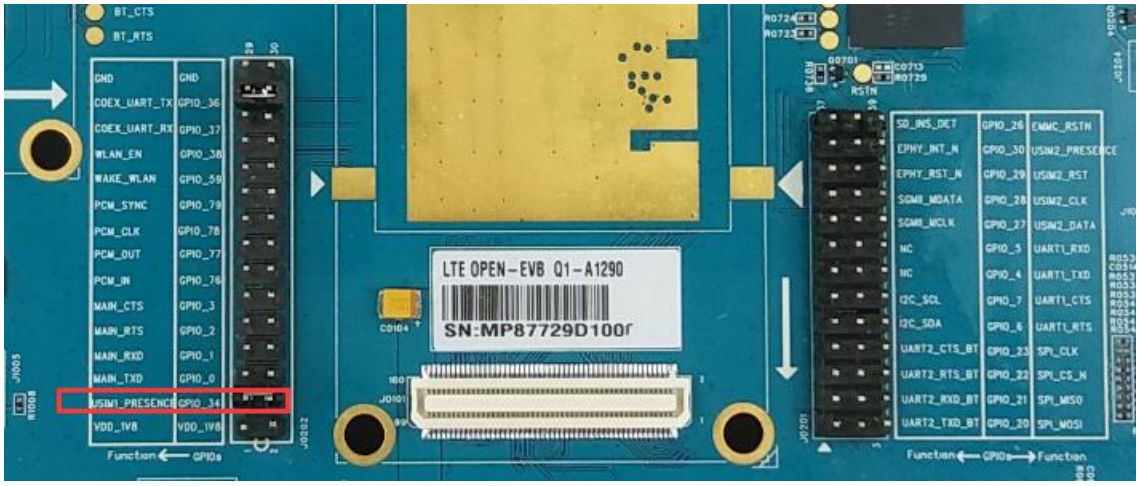

Figure 24: (U)SIM Hot-Plug GPIO Configuration

Table 11: (U)SIM Hot-Plug GPIO Configuration

Pin No.	Pin Name	Operation	Pin No.	Pin Name
Pin 3 (J0202)	USIM1_PRESENCE	Shorted to	Pin 4 (J0202)	GPIO_34

4.7. SD Card Interfaces & eMMC (J0701/J0702 & U0702)

LTE OPEN EVB provides two SD card interfaces (J0701 and J0702), which can be used for micro SD cards and standard SD cards respectively. These two interfaces support maximally 32GB and cannot be used simultaneously. With the SD card interface, customers can easily enhance the memory capacity of modules.

The following figure shows the simplified interface schematic for J0701, J0702 and U0702.

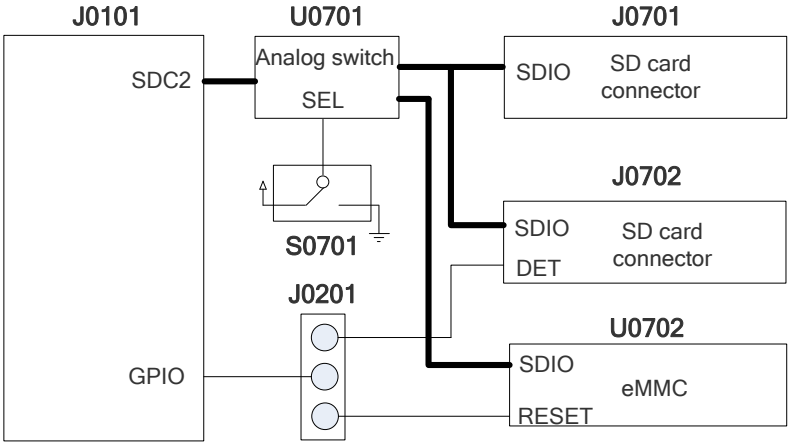

Figure 25: Simplified Interface Schematic for SD Card Interface J0701, J0702

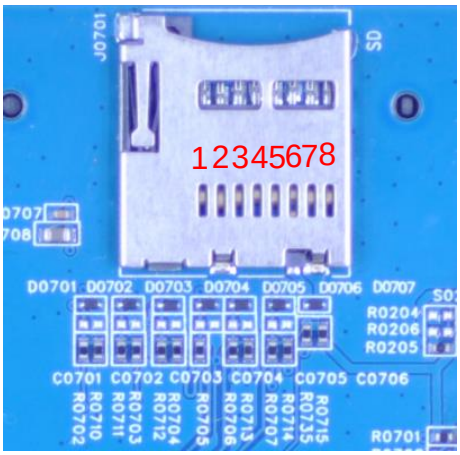

Figure 26: Pin Assignment of J0701

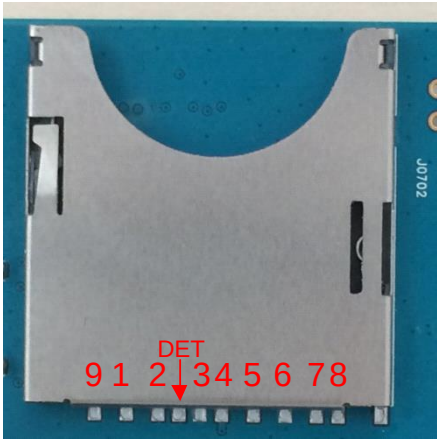

Figure 27: Pin Assignment of J0702

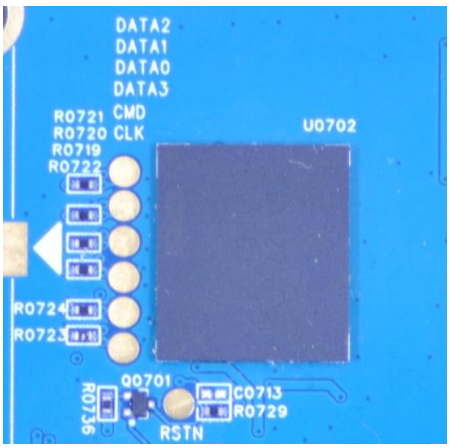

Figure 28: eMMC Device

Table 12: Pin Definition of J0701

Pin No.	Signal Name	I/O[1)]	Function
1	DAT2	IO	SDIO data line 2
2	CD/DAT3	IO	Card detect/SDIO data line 3
3	CMD	IO	SDIO command line
4	VDD	PO	Supply voltage
5	CLK	DO	SDIO clock
6	VSS	/	Power supply GND
7	DAT0	IO	SDIO data line 0
8	DAT1	IO	SDIO data line 1

NOTE

[1)] Direction: from connector to SD card.

Table 13: Pin Definition of J0702

Pin No.	Signal Name	I/O[1)]	Function
1	CD/DAT3	IO	Card detect/SDIO data line 3
2	CMD	IO	SDIO command line
3	VSS	/	Power supply GND
4	VDD	P	Supply voltage
5	CLK	IO	SDIO clock
6	VSS2	/	Power supply GND
7	DAT0	IO	SDIO data line 0
8	DAT1	IO	SDIO data line 1
9	DAT2	IO	SDIO data line 2
	DET	DI	SD card detect

NOTE

[1)] Direction: from connector to SD card.

Table 14: S0701 Function

Switched Direction	Description
Left	Enable SD card function
Right	Enable eMMC function

If SD card function is intended to be used, then please switch S0701 to the left and short the signal illustrated in the figure and table below. After that, a standard SD card can be inserted into J0702 or a micro SD card into J0701.

Figure 29: SD Card Function GPIO Configuration

Table 15: SD Card Function GPIO Configuration

Pin No.	Pin Name	Operation	Pin No.	Pin Name
Pin 37 (J0201)	SD_INS_DET	Shorted to	Pin 38 (J0201)	GPIO_26

If eMMC function is intended to be used, then please switch S0701 to the right and short the signal illustrated in the figure and table below.

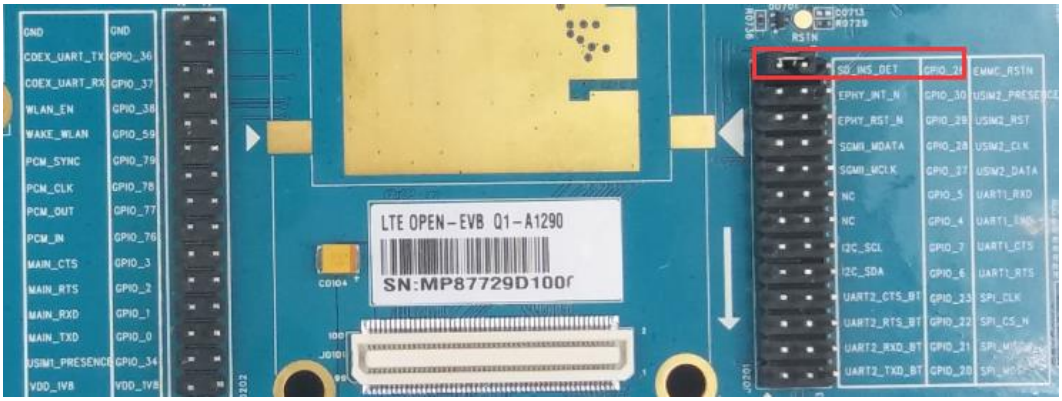

Figure 30: eMMC Function GPIO Configuration

Table 16: eMMC Function GPIO Configuration

Pin No.	Pin Name	Operation	Pin No.	Pin Name
Pin 39 (J0201)	EMMC_RSTN	Shorted to	Pin 38 (J0201)	GPIO_26

4.8. UART Interfaces (J0501/J0502/J0503)

LTE OPEN EVB offers three UART interfaces: COM (DEBUG) J0501, COM3 (MAIN) J0502 and COM (UART1) J0503.

- J0501 can be used for Linux console and log output.
- J0502 is intended for the communication between the module and the host application. It can be used for data transmission and AT command communication.
- J0503 is intended for the communication between the module and the host application. It can be used for data transmission.

The following figure shows the block diagram of J0501/J0502/J0503 on LTE OPEN EVB.

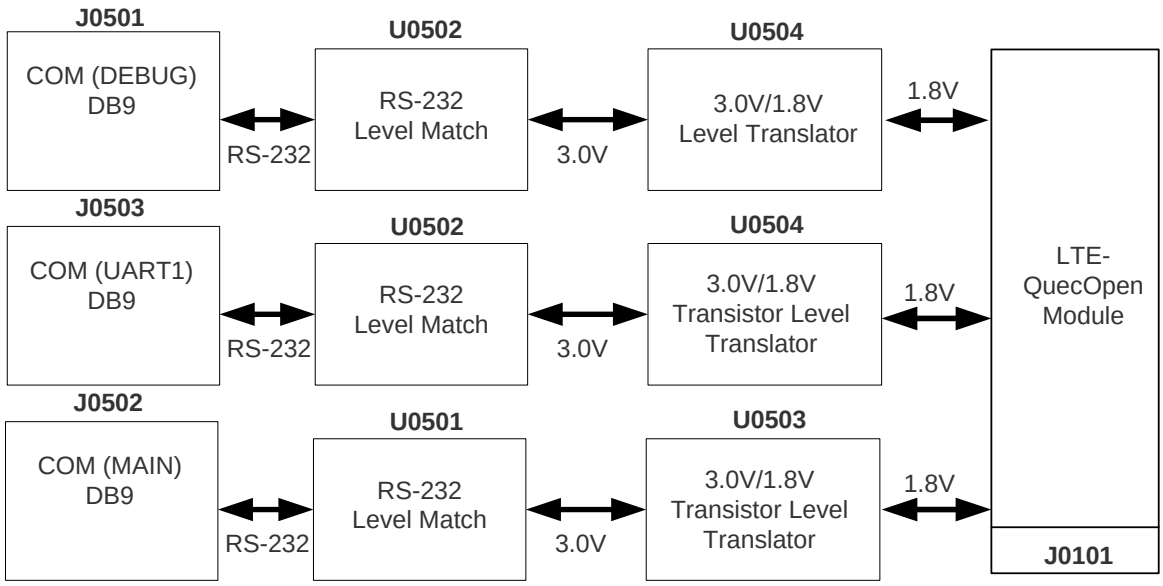

Figure 31: UART Block Diagram

The pin assignment and pin definition of J0501/J0502/J0503 are illustrated below.

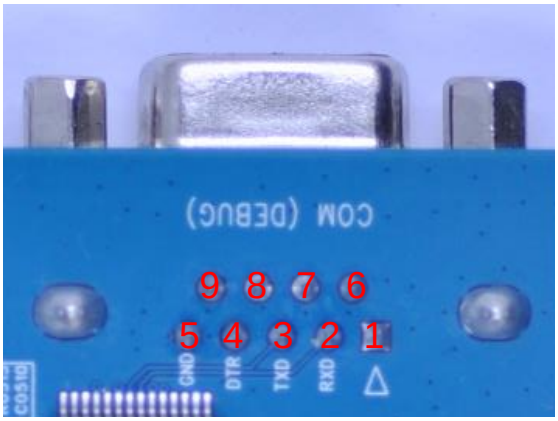

Figure 32: Pin Assignment of J0501

Table 17: Pin Definition of J0501

Pin No.	Signal Name	I/O	Description
1, 6, 7, 8, 9	/	/	Not connected
2	RS232_RXD	DI	Receive Data
3	RS232_TXD	DO	Transmit data
4	RS232_DTR	DI	Data terminal ready
5	RS232_GND	/	GND

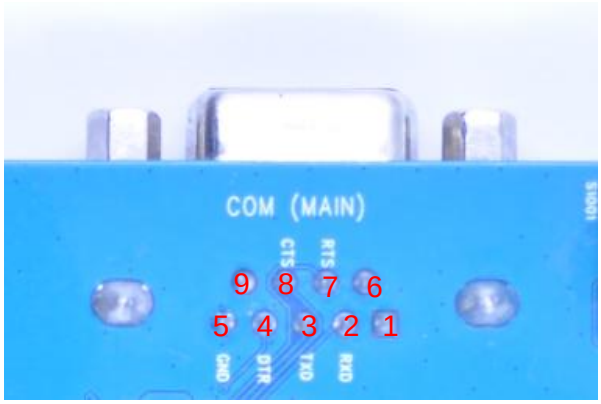

Figure 33: Pin Assignment of J0502

Table 18: Pin Definition of J0502

Pin No.	Signal Name	I/O	Description
1	NC	/	Not connected
2	RS232_RXD	DI	Receive data
3	RS232_TXD	DO	Transmit data
4	RS232_DTR	DI	Data terminal ready
5	RS232_GND	/	GND
6	NC	/	Not connected
7	RS232_RTS	DI	Request to send
8	RS232_CTS	DO	Clear to send
9	NC	/	Not connected

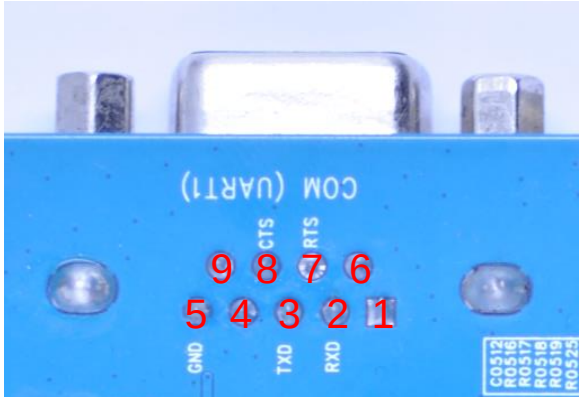

Figure 34: Pin Assignment of J0503

Table 19: Pin Definition of J0503

Pin No.	Signal Name	I/O	Description
1	NC	/	Not connected
2	RS232_RXD	DI	Receive data
3	RS232_TXD	DO	Transmit data

4	NC	/	Not connected
5	RS232_GND	/	GND
6	NC	/	Not connected
7	RS232_RTS	DI	Request to send
8	RS232_CTS	DO	Clear to send
9	NC	/	Not connected

If COM (MAIN) and COM (UART1) functions are intended to be used, then please short the signals illustrated in the figure and table below.

Figure 35: COM (MAIN) & COM (UART1) Function GPIO Configuration

Table 20: COM (MAIN) & COM (UART1) Function GPIO Configuration

Pin No.	Pin Name	Operation	Pin No.	Pin Name
COM (MAIN) J0502				
Pin 5 (J0202)	MAIN_TXD	Shorted to	Pin 6 (J0202)	GPIO_0
Pin 7 (J0202)	MAIN_RXD	Shorted to	Pin 8 (J0202)	GPIO_1
Pin 9 (J0202)	MAIN_RTS	Shorted to	Pin 10 (J0202)	GPIO_2
Pin 11 (J0202)	MAIN_CTS	Shorted to	Pin 12 (J0202)	GPIO_3

COM (UART1) J0503				
Pin 15 (J0201)	UART1_RTS	Shorted to	Pin 14 (J0201)	GPIO_6
Pin 18 (J0201)	UART1_CTS	Shorted to	Pin 17 (J0201)	GPIO_7
Pin 21 (J0201)	UART1_TXD	Shorted to	Pin 20 (J0201)	GPIO_4
Pin 24 (J0201)	UART1_RXD	Shorted to	Pin 23 (J0201)	GPIO_5

4.9. SPI Flash (U0601)

LTE OPEN EVB includes one SPI Flash device (U0601), as shown in the following figure.

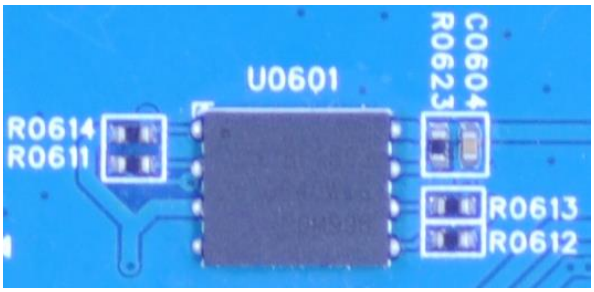

Figure 36: SPI Flash Device

If the function is intended to be used, then please short the signals illustrated in the figure and table below.

Figure 37: SPI Flash Function GPIO Configuration

Table 21: SPI Flash Function GPIO Configuration

Pin No.	Pin Name	Operation	Pin No.	Pin Name
Pin 3 (J0201)	SPI_MOSI	Shorted to	Pin 2 (J0201)	GPIO_20
Pin 6 (J0201)	SPI_MISO	Shorted to	Pin 5 (J0201)	GPIO_21
Pin 9 (J0201)	SPI_CS_N	Shorted to	Pin 8 (J0201)	GPIO_22
Pin 12 (J0201)	SPI_CLK	Shorted to	Pin 11 (J0201)	GPIO_23

4.10. EEPROM (U0903)

LTE OPEN EVB includes one EEPROM device (U0903), as shown in the following figure.

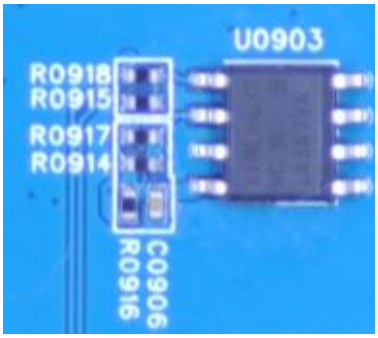

Figure 38: EEPROM Device

If the function is intended to be used, then please short the signals illustrated in the figure and table below.

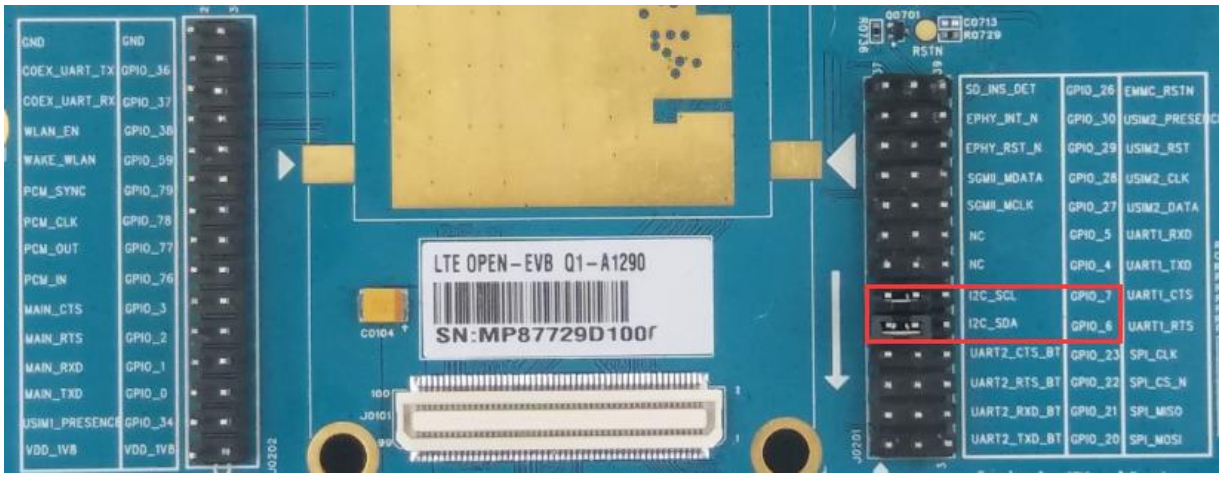

Figure 39: EEPROM Function GPIO Configuration

Table 22: EEPROM Function GPIO Configuration

Pin No.	Pin Name	Operation	Pin No.	Pin Name
Pin 14 (J0201)	I2C_SDA	Shorted to	Pin 13 (J0201)	GPIO_6
Pin 17 (J0201)	I2C_SCA	Shorted to	Pin 16 (J0201)	GPIO_7

4.11. Switches and Buttons

LTE OPEN EVB includes five switches (S0201, S0301, S0401, S1001 and S0701) and two buttons (S0402 and S0403), as shown in the following figures.

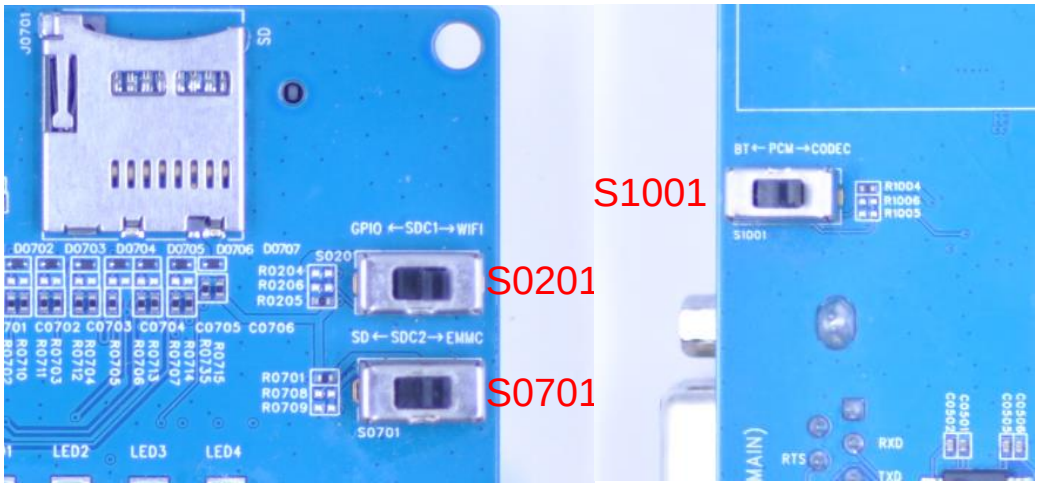

Figure 40: S0201/S0701/S1001 Switch

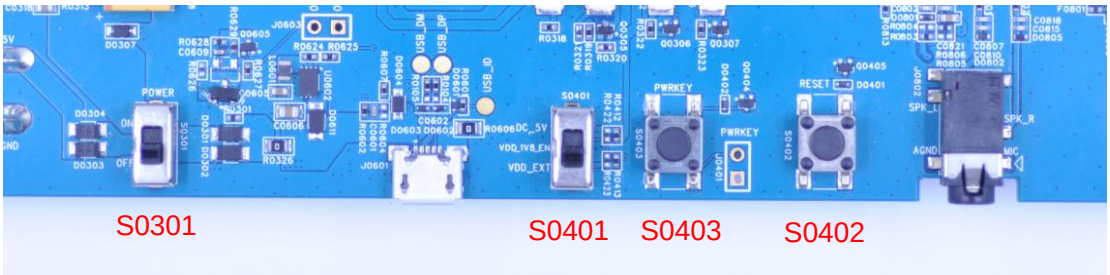

Figure 41: S0301/S0401 Switch and S0403/S0402 Button

Table 23: Description of Switches and Buttons

Reference No.	Description
S0301	VBAT ON/OFF control
S0401	Reserved for internal testing. Switch it to down by default.
S1001	● Switched to left: connect BT interface (PCM) of AF20 to the PCM interface of AG35 module ● Switched to right: connect the codec board interface (J0804) on EVB to the PCM interface of LTE-QuecOpen modules
S0201	● Switched to left: connect the GPIO interface of J0203 to the module's SDC1 interface, for testing customers' own modules ● Switched to right: connect the SDIO interface of FC20 and AF20 modules to SDC1 interface of LTE-QuecOpen modules
S0701	● Switched to left: connect SD interface of EVB to SDC2 interface of LTE-QuecOpen modules ● Switched to right: connect eMMC to SDC2 interface of LTE-QuecOpen modules
S0403	Power key (push button), used to turn on/off LTE-QuecOpen modules
S0402	Reset button (push button), used to reset LTE-QuecOpen modules

4.12. Status Indicators

LTE OPEN EVB provides 8 status indicators: D0310, D0311, D0312, D0313, D0201, D0202, D0203 and D0204. The following figure shows the location of these LED indicators.

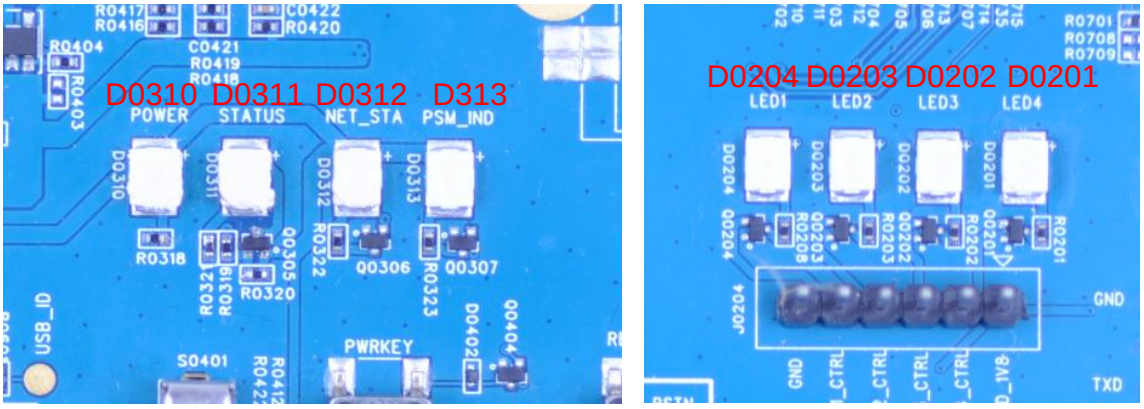

Figure 42: Status Indication LEDs

Table 24: Description of Status Indication LEDs

Reference No.	Description
D0310	VBAT ON/OFF indicator. Bright: VBAT ON Extinct: VBAT OFF
D0311	Power ON/OFF indicator for LTE-QuecOpen modules Bright: the module is powered on Extinct: the module is powered off
D0312	Network status indicator for LTE-QuecOpen modules For detailed information, please refer to ***document [2]***.
D0313	Power saving mode status indicator for BG96-QuecOpen module
D0201~D0204	Used for GPIO testing, and a high level will light up the LEDs

4.13. GPIO Interfaces

Figure 43: GPIO Jumpers J0201 and J0202

Table 25: Pin Definition of J0202

Pin No.	Pin Name	Pin No.	Pin Name
29	GND	30	GND
27	COEX_UART_TX	28	GPIO_36

25	COEX_UART_RX	26	GPIO_37
23	WLAN_EN	24	GPIO_38
21	WAKE_WLAN	22	GPIO_59
19	PCM_SYNC	20	GPIO_79
17	PCM_CLK	18	GPIO_78
15	PCM_OUT	16	GPIO_77
13	PCM_IN	14	GPIO_76
11	MAIN_CTS	12	GPIO_3
9	MAIN_RTS	10	GPIO_2
7	MAIN_RXD	8	GPIO_1
5	MAIN_TXD	6	GPIO_0
3	USIM1_PRESENCE	4	GPIO_34
1	VDD_1V8	2	VDD_1V8

Table 26: Pin Definition of J0201

Pin No.	Pin Name	Pin No.	Pin Name	Pin No.	Pin Name
37	SD_INS_DET	38	GPIO_26	39	EMMC_RSTN
34	EPHY_INT_N	35	GPIO_30	36	USIM2_PRENSCE
31	EPHY_RST_N	32	GPIO_29	33	USIM2_RST
28	SGMII_MDATA	29	GPIO_28	30	USIM2_CLK
25	SGMII_CLK	26	GPIO_27	27	USIM2_DATA
22	NC	23	GPIO_5	24	UART1_RXD
19	NC	20	GPIO_4	21	UART1_TXD
16	I2C_SCL	17	GPIO_7	18	UART1_CTS
13	I2C_SDA	14	GPIO_6	15	UART1_RTS

10	UART2_CTS_BT	11	GPIO_23	12	SPI_CLK
7	UART2_RTS_BT	8	GPIO_22	9	SPI_CS_N
4	UART2_RXD_BT	5	GPIO_21	6	SPI_MISO
1	UART2_TXD_BT	2	GPIO_20	3	SPI_MOSI

The name of the GPIO pins on LTE OPEN EVB are defined based on EC2x-QuecOpen modules. The pin assignment of AG35-QuecOpen and BG96-QuecOpen modules differs from that of EC2x-QuecOpen modules. The following table lists the detailed GPIO number on AG35-QuecOpen module.

Table 27: GPIO List for AG35-QuecOpen Module

AG35-QuecOpen Pin No.	AG35-QuecOpen Pin Name	GPIO Number on AG35-QuecOpen Module	Pin Name on LTE OPEN EVB
6	EPHY_RST_N	/	GPIO_29 (J0201)
7	SGMII_CLK	/	GPIO_27 (J0201)
8	SGMII_DATA	/	GPIO_28 (J0201)
9	EPHY_INT_N	GPIO_30	GPIO_30 (J0201)
25	USIM_ PRESENCE	GPIO_34	GPIO_34 (J0202)
42	I2C1_SDA	GPIO_18	GPIO_6 (J0201)
43	I2C1_SCL	GPIO_19	GPIO_7 (J0201)
52	SDC2_INS_DET	GPIO_26	GPIO_26 (J0201)
56	UART1_CTS	GPIO_3	GPIO_3 J0202)
57	UART1_RTS	GPIO_2	GPIO_2 (J0202)
58	UART1_RXD	GPIO_1	GPIO_1 (J0202)
59	GPIO1	GPIO_38	GPIO_4 (J0201)
60	UART1_TXD	GPIO_0	GPIO_0 (J0202)
61	GPIO2	GPIO_75	GPIO6 (J0203)
62	GPIO3	GPIO_74	GPIO_5 (J0201)

65	PCM_SYNC	GPIO_79	GPIO_79 (J0202)
66	PCM_IN	GPIO_76	GPIO_76 (J0202)
67	PCM_CLK	GPIO_78	GPIO_78 (J0202)
68	PCM_OUT	GPIO_77	GPIO_77 (J0202)
73	I2C2_SDA	GPIO_6	R0922
74	I2C2_SCL	GPIO_7	R0921
77	SPI_MOSI	GPIO_20	SPI_MOSI_AG35 (J1005)
78	SPI_MISO	GPIO_21	SPI_MISO_AG35 (J1005)
79	SPI_CS_N	GPIO_22	SPI_CS_AG35 (J1005)
80	SPI_CLK	GPIO_23	SPI_CLK_AG35 (J1005)
143	OTG_PWR_EN	GPIO_41	OTG_PWR_EN (J0603)
144	GPIO4	GPIO_25	GPIO3 (J0203)
147	GPIO5	GPIO_24	GPIO5 (J0203)
149	WLAN_EN	GPIO_54	GPIO_38 (J0202)
150	GPIO6	GPIO_42	GPIO1 (J0203)
159	GPIO7	GPIO_58	GPIO1_AG35
160	WLAN_WAKE	GPIO_59	GPIO_59(J0202)
163	UART2_TXD	GPIO_8	GPIO_20 (J0201)
164	UART2_CTS	GPIO_11	GPIO_23 (J0201)
165	UART2_RXD	GPIO_9	GPIO_21 (J0201)
166	UART2_RTS	GPIO_10	GPIO_22 (J0201)

NOTE

The differences of GPIO pins for BG96-QuecOpen module will be added in a future release.

Usage Examples

- If GPIO output test function is intended to be used, then please connect the GPIO to be tested of J0201/J0202 to any one of J0204 pin 2~5. When the GPIO outputs a high-level, the LED will light up.
- If GPIO input test function is intended to be used, then please connect the GPIO to be tested of J0201/J0202 to J0204 pin 1 (VDD_1V8) or pin 6 (GND).

4.14. Test Points

LTE OPEN EVB provides a series of test points. They can help customers to obtain the corresponding waveform of some signals. The following two figures show test points J1003, J1004, J1005, J1006, J0505, J1007, J0203 and J0204.

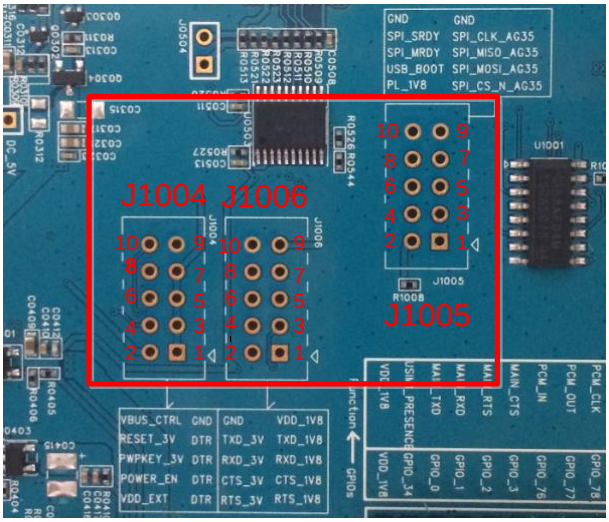

Figure 44: Test Point J1004/J1005/J1006

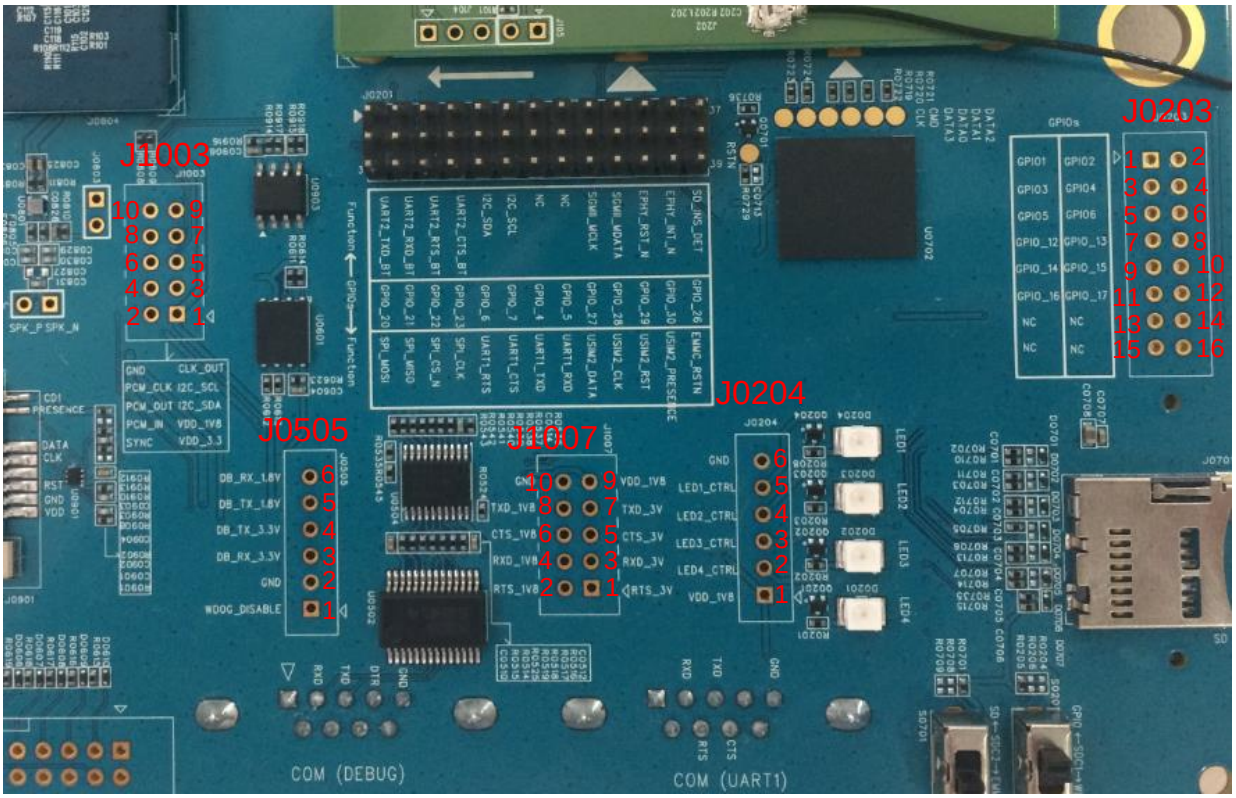

Figure 45: Test Point J1003/J0505/J1007/J10204/J0203

Table 28: Pin Definition of Test Points

J0203		
Pin No.	**Pin Name**	**Description**
1	GPIO1	Connect directly to LTE-QuecOpen modules
2	GPIO2	
3	GPIO3	
4	GPIO4	
5	GPIO5	
6	GPIO6	
7	GPIO_12	Connect to LTE-QuecOpen modules with analog switch U0201. If GPIO function is intended to be used, S0201 should be switched to the left.
8	GPIO_13	

9	GPIO_14	
10	GPIO_15	
11	GPIO_16	
12	GPIO_17	
13	GPIO_18	Reserved
14	GPIO_19	Reserved
15	GRFC1	Reserved
16	GRFC2	Reserved
J0203		
Pin No.	**Pin Name**	**Description**
1	VDD_1V8	1.8V power supply from U0401
2	LED1	Can be connected to any GPIO. Used for GPIO output test.
3	LED2	
4	LED3	
5	LED4	
6	GND	GND
J0505		
Pin No.	**Pin Name**	**Description**
1	WDOG_DISABLE	Reserved
2	GND	GND
3	DEBUG_RXD_3.3V	Used for test
4	DEBUG_TXD_3.3V	
5	DEBUG_TXD_1.8V	
6	DEBUG_RXD_1.8V	
J1003		

Pin No.	Pin Name	Description
1	VDD_3.3V	3.3V power supply from U0402
2	PCM_SYNC	Connected to J0202 pin 19 with analog switch U1001. If this function is intended to be used, S1001 should be switched to the right.
3	VDD_1V8	1.8V power supply from U0401
4	PCM_IN	Connected to J0202 pin 13 with analog switch U1001. If this function is intended to be used, S1001 should be switched to the right.
5	I2C_SDA	Connected directly to J0201 pin 13
6	PCM_OUT	Connected to J0202 pin 15 with analog switch U1001. If this function is intended to be used, S1001 should be switched to the right.
7	I2C_SCL	Connected directly to J0201 pin 16
8	PCM_CLK	Connected to J0202 pin 17 with analog switch U1001. If this function is intended to be used, S1001 should be switched to the right.
9	CLK_OUT	Reserved
10	GND	Ground
J1004		
Pin No.	**Pin Name**	**Description**
1, 3, 5, 7	DTR_TEST	Data terminal ready test pins. Customers can connect COM (MAIN) to PC, and use the UART tool to control DTR.
2	VDD_EXT	Connected directly to VDD_EXT of LTE-QuecOpen modules
4	POWER_EN	VBAT enable pin. Connect it to DTR_TEST pin, and then the VBAT of LTE-QuecOpen modules can be controlled by PC DTR. When DTR is at high level, VBAT will be switched off.
6	PWRKEY_3.0V	PWRKEY_3.0V test pin. Connect it to DTR_TEST pin, and then PWRKEY of LTE-QuecOpen modules can be controlled by PC DTR. When DTR is at high level, PWRKEY will be pulled down to start up the module.
8	RESET_3.0V	RESET_3.0V test pin. Connect it to DTR_TEST pin, and then RESET of LTE-QuecOpen

		modules can be controlled by PC DTR. When DTR is at high level, RESET will be pulled down to reset the module.
10	VBUS_TEST	USB_VBUS enable pin. Connect it to DTR_TEST pin, and then USB_VBUS of LTE-QuecOpen modules can be controlled by PC DTR. When DTR is at low level, USB_VBUS will be switched off to disable recognition of module's USB.
J1005		
Pin No.	**Pin Name**	**Description**
1	SPI_CS_N_AG35	Connected directly to AG35-QuecOpen module
2	VDD_1V8	Connected directly to U0401. Connect it to USB_BOOT pin will make the EC2x/AG35-QuecOpen module enter into emergency download mode.
3	SPI_MOSI_AG35	Connected directly to AG35-QuecOpen module
4	USB_BOOT	Connected directly to EC2x/AG35-QuecOpen module. Connect it to USB_BOOT pin will make the EC2x/AG35-QuecOpen modules enter into emergency download mode.
5	SPI_MISO_AG35	Connected directly to AG35-QuecOpen module
6	SPI_MRDY	Reserved
7	SPI_CLK_AG35	Connected directly to AG35-QuecOpen module
8	SPI_SRDY	Reserved
9	GND	GND
10	GND	GND
J1006		
Pin No.	**Pin Name**	**Description**
1	MAIN_RTS_1.8V	Used for test
2	MAIN_RTS_3.0V	
3	MAIN_CTS_1.8V	
4	MAIN_CTS_3.0V	
5	MAIN_RXD_1.8V	
6	MAIN_RXD_3.0V	

7	MAIN_TXD_1.8V	
8	MAIN_TXD_1.8V	
9	VDD_1V8	1.8V power supply from U0401
10	GND	GND
J1007		
Pin No.	**Pin Name**	**Description**
1	UART1_RTS_3.0V	Used for test
2	UART1_RTS_1.8V	
3	UART1_RXD_3.0V	
4	UART1_RXD_1.8V	
5	UART1_CTS_3.0V	
6	UART1_CTS_1.8V	
7	UART1_TXD_3.0V	
8	UART1_TXD_1.8V	
9	VDD_1V8	1.8V power supply from U0401
10	GND	GND

5 Operation Procedures Illustration

This chapter introduces how to use LTE OPEN EVB for testing and evaluation of Quectel LTE-QuecOpen and Wi-Fi modules.

5.1. Power on Modules

5.1.1. Power on LTE-QuecOpen Modules

1. Connect the TE-A of respective modules to the EVB via connectors J0101 and J0102.

2. Insert a (U)SIM card into the U(SIM) card connector J0901 on EVB, and connect the antennas to the TE-A.

3. Connect the EVB to a 5V power adapter, or connect the EVB to PC via USB to RS-232 converter cable.

4. Switch S0301 (POWER) to **ON** state, then D0310 (VBAT ON/OFF indicator) will light up. Press the S0403 (PWRKEY) for at least 100ms, then the module will be powered on and D0311 (power ON/OFF status indicator) will light up.

5.1.2. Power on Wi-Fi Modules

Wi-Fi function is only supported on Quectel EC2x/AG35-QuecOpen module. BG96-QuecOpen does not support the function.

1. Make sure EC2x/AG35-QuecOpen module is powered on if there is a need to test the Wi-Fi function of them.

2. Connect the TE-A of Wi-Fi modules to the EVB via connectors J1001 and J1002, and then connect the Wi-Fi antenna to the TE-A.

3. Connect the TE-A to PC via an Ethernet cable.

4. Send **AT+QWIFI=1** command to EC2x/AG35-QuecOpen module to enable power supply for Wi-Fi modules. For more details, please refer to ***document [2]***, ***[3]*** and ***[4]***. Before sending the command, please make sure the EVB has been connected to PC via USB to RS-232 converter cable.

The following table shows EC2x/AG35-QuecOpen module's network status which is indicated via D0312.

Table 29: Indication of D0312

Status Indication LEDs	State	Network Status
D0312 NET_STATUS	Flicker slowly (200ms ON/1800ms OFF)	Network searching
	Flicker slowly (1800ms ON/200ms OFF)	Idle mode
	Flicker slowly (125ms ON/125ms OFF)	Data is being transferred over 2G/3G/4G network
	Always ON	Voice calling

5.2. Communication Via USB or UART Interface

5.2.1. Communication via USB Interface

1. Power on the LTE-QuecOpen module according to the procedures mentioned in ***Chapter 5.1.1***.

2. Connect the EVB and the PC with Micro-USB cable through USB interface, and then run the driver disk on PC to install the USB driver. For details about USB driver installation, please refer to ***document [1]***. The USB port numbers can be viewed through the PC Device Manager, as shown below.

Figure 46: USB Ports

3. Install and then use the QCOM tool provided by Quectel to realize the communication between the module and the PC. The following figure shows the COM Port Setting field on QCOM: select correct "**COM port**" (USB AT Port which is shown in above figure) and set correct "**Baudrate**" (such as 115200bps). For more details about QCOM tool usage and configuration, please refer to ***document [6]***.

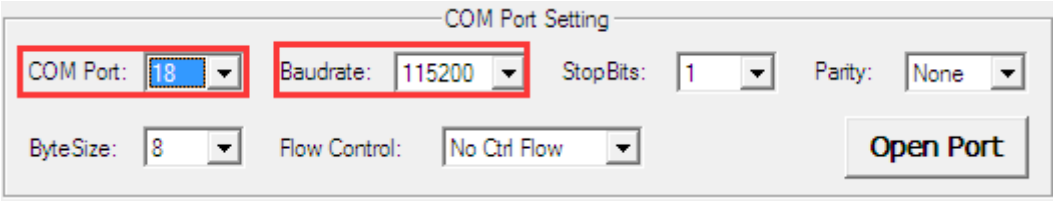

Figure 47: COM Port Setting Field on QCOM (USB AT Port Connection)

5.2.2. Communication via UART Interface

1. Run the driver disk on PC to install the USB to RS-232 driver.

2. Connect the main UART interface of module to PC with the USB to RS-232 converter cable, and the USB serial port number can be checked through the PC Device Manager, as shown below.

Figure 48: USB Serial Port

3. Install and then use the QCOM tool provided by Quectel to realize the communication between the module and the PC. The following figure shows the COM Port Setting field on QCOM: select correct "**COM port**" (USB Serial Port) and set correct "**Baudrate**" (such as 115200bps). For more details about QCOM tool usage and configuration, please refer to ***document [6]***.

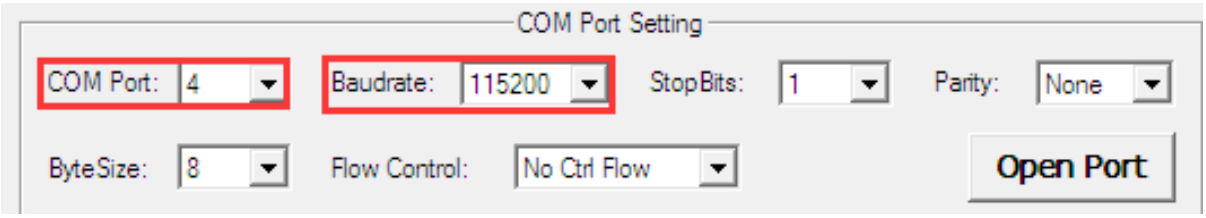

Figure 49: COM Port Setting Field on QCOM (USB Serial Port Connection)

5.3. Firmware Upgrade

The firmware of Quectel LTE-QuecOpen modules is upgraded via USB port by default. Please follow the procedures below to upgrade firmware.

1. Install and open the firmware upgrade tool QFlash on PC and then power on the LTE-QuecOpen modules according to the procedures mentioned in ***Chapter 5.1.1***.
2. Click the "**COM Port**" dropdown list and select the USB DM port.
3. Click the "**Load FW Files**" button to choose the firmware package.
4. Click the "**Start**" button to upgrade the firmware.

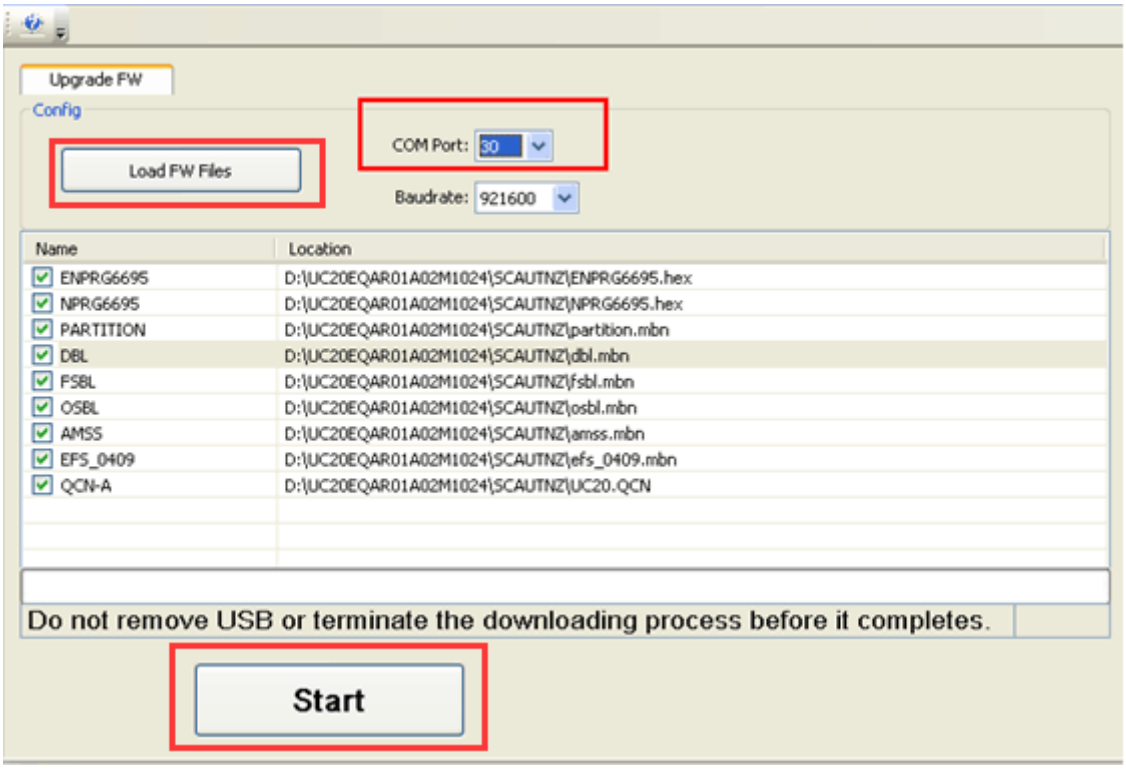

Figure 50: QFlash Configurations for Firmware Upgrade

5.4. Reset Modules

The emergency reset option is only used in case of emergency. For example, the software does not respond for more than 5s due to some serious problems.

Press the button S0402 (RESET) for more than 150ms then release it to reset LTE-QuecOpen modules. However, this operation may cause the loss of information stored in the memory as the reset module has been initialized.

5.5. Power off Modules

5.5.1. Power off LTE-QuecOpen modules

There are two ways to power off LTE-QuecOpen modules.

One way is to execute **AT+QPOWD** command, and this is the best and the safest way. The module will log off from the network and save data before shutdown, but it will be powered on again after shutdown. For more details about the AT command, please refer to ***document [5]***.

The other way is to press down S0302 (PWRKEY) for at least 0.6s, and then the module will be powered off.

5.5.2. Power off Wi-Fi modules

AT+QWIFI=0 command can be used to power off Wi-Fi modules. For more details, please refer to document [3] and [4].

6 Appendix A References

Table 30: Related Documents

SN	Document Name	Remark
[1]	Quectel_LTE_Windows_USB_Drivers_Installation_Guide	Windows USB driver installation guide for EC2x, BG96 and AG35 modules
[2]	Quectel_xx_Hardware_Design	Respective hardware design for EC2x/BG96/AG35-QuecOpen modules
[3]	Quectel_FC20_Series_Hardware_Design	FC20 series hardware design
[4]	Quectel_AF20_Hardware_Design	AF20 hardware design
[5]	Quectel_xx_AT_Commands_Manual	AT commands manual of EC2x, BG96 and AG35 modules
[6]	Quectel_QCOM_User_Guide	User guide for QCOM tool

Table 31: Terms and Abbreviations

Abbreviation	Description
AGND	Analogue Ground
BTB	Board to Board
COM	Cluster Communication Port
DC	Direct Current
DI	Digital Input
DO	Digital Output
EVB	Evaluation Board
GND	Ground
GNSS	Global Navigation Satellite System

I/O	Input/Output
LED	Light Emitting Diode
LTE	Long Term Evolution
MIC	Microphone
NC	Not Connected
PC	Private Computer
PCB	Printed Circuit Board
PCM	Pulse Code Modulation
PO	Power Output
RF	Radio Frequency
SD	Secure Digital
UART	Universal Asynchronous Receiver & Transmitter
UMTS	Universal Mobile Telecommunications System
USB	Universal Serial Bus
U(SIM)	(Universal) Subscriber Identity Module
VBAT	Voltage of Battery